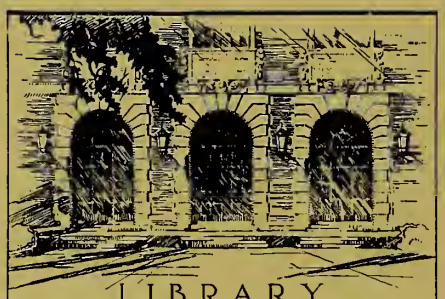

UNIVERSITY OF ILLINOIS

GRADUATE COLLEGE

DIGITAL COMPUTER LABORATORY

TECHNICAL PROGRESS REPORT

PART I - HIGH-SPEED COMPUTER PROGRAM

PART II - CIRCUIT RESEARCH PROGRAM

PART III - MATHEMATICAL METHODS

PART IV - ILLIAC USE AND OPERATION

PART V - IBM 650 USE AND OPERATION

PART VI - GENERAL LABORATORY INFORMATION

January, 1960

PART I

HIGH-SPEED COMPUTER PROGRAM

This work is supported in part by Contract No. AT(11-1)-415 of the Atomic Energy Commission and in part by the University of Illinois. Contract No. AT(11-1)-415 is supported jointly by the Atomic Energy Commission and the Office of Naval Research.

A) Logical Design

1. Main Arithmetic Unit End Connections

Selector connections for A_{hi} were simplified as a result of a meeting with the planning committee regarding the execution of logical shifts. Also the subtractor to be used during divide and floating point add, at the low ends of R and Q, was designed.

To further determine the special connections on the double length accumulator, a preliminary study on control sequences was conducted. The following is a list of signals required regarding the contents of the A, Q, R, S, and M registers; the iterative parts of divide, normalize and multiply are not considered, but special initial and concluding steps are considered:

1) Let $Z_1 = s_1 \vee s_2 \vee s_3 \vee \ldots s_{44}$

$Z_2 = Z_1 \vee r_1 \vee r_2$

$Z_3 = q_2' \vee q_3' \vee q_4' \vee q_5 \vee q_6 \ldots \vee q_{44}$

$Z_4 = q_1' \vee Z_3$

Uses:

a) Add 1 to a_{44} during ROUND A if $q_1 [a_{44} \vee Z_3] = 1$

b) Set "AQ = 0" indicator if $Z_2 \vee Z_4 = 0$ after first step in assimilation.

2) $s_1 \bar{s}_2 \vee \bar{s}_1 s_2 = 1$, after first step in assimilation implies fractional overflow.

3) a) $r_1 r_2 r_3 r_4 = 1$: sensed after first step in "ROUND A to R, then STORE R"; indicates roundoff caused denormalization.

b) $\bar{r}_1 r_2 = 1$: same situation as a), except denormalized in the other direction.

4) $a_{-1} a_0 (\bar{a}_1 \vee \bar{a}_2) \vee \bar{a}_{-1} \bar{a}_0 (a_1 \vee a_2) = 1$:

A is normalized. (Further information required is obtained from the division predictor.

5) $m_{-1}m_0(\bar{m}_1 \vee \bar{m}_2) \vee \bar{m}_{-1}\,\bar{m}_2\,(m_1 \vee m_2) = 1$

Divisor is normalized. Since 4) and 5) always involve assimilated numbers, the sensing of both the -1 and the 0 positions is redundant in both cases.

6) a_{-1}, a_0, s_{-1}, s_0: Sign field bits are examined to:

a) Find the true sign, during COMPARE MAGNITUDE, DIVIDE, etc.

b) Set a_{-1} equal to final a_0 in shift instructions.

c) Provide "jump" criterion to program.

(R. R. Shively)

2. Main Arithmetic Unit Division Predictor

Certain problems still remain in the design of the division predictor logic. A decision regarding the electrical configuration to be used in checking for all zeros during a clear cycle has been postponed pending the design of a modified AND-OR complex. The three-halves logic of the division predictor has been tentatively redesigned on the basis of this element. Consideration has been given to the possibility of using the two comparators and the seven bit assimilator in the normalization operation. The logic required for quotient normalization and roundoff is being designed at present.

(J. O. Penhollow)

3. Exponent Arithmetic Unit

The problem of decoding the range of "d" (the difference of two exponents) for the selection of a floating point addition sequence has been investigated. Functional design of a decoder has been completed. The methods of setting the EAU shift counter for floating point addition have been selected.

(A. Avizienis)

4. Reply Back Eccles-Jordan

Work was completed on the design of a new memory element, the Reply Back Eccles-Jordan. It has standard input requirements and a fanout of five to standard logic from each output. From the input to the reply there are three collector delays. When the reply is not activated, as is usually the case, there are two collector delays from input to output. The logical equivalent is as follows.

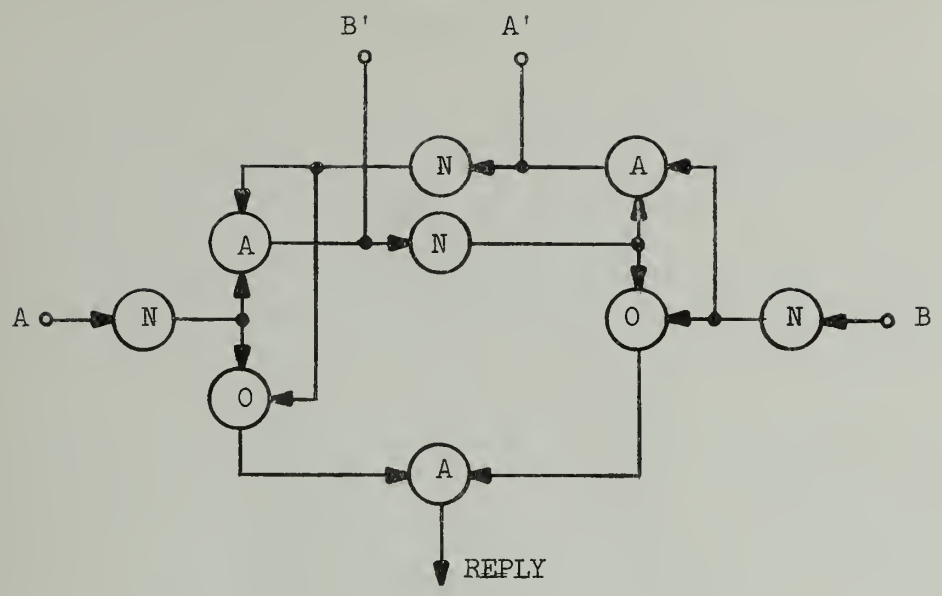

Figure 1
Reply Back Eccles-Jordan

The circuit uses seven transistors and has a forbidden state of 1-1. A and B are the inputs and A' and B' are the respective outputs.

(N. H. Johnson)

B) Core Storage Unit

The circuits which drive large numbers of paralleled diode-logic circuits were redesigned to reduce the number of driver types from 3 to 2. This change results in all memory logic drivers, except those driving coaxial cables, being of only one type.

The technical and physical details of the stack of 64 core planes were clarified in discussions with the manufacturer, Telemeter Magnetics, Inc.

(S. Ray)

C) Input-Output and Auxiliary Storage

In order to obtain more information on the packing density limitations of the FR300, we are building circuits for the direct measurement of inter-channel time displacement errors between any two channels.

(R. L. Cummins)

Timing circuits for 4 channel dropout tests were designed and tested. Single channel dropout tests were continued. A report on the dropout tests is being prepared.

(C. N. Liu)

The second chassis of dropout detection equipment has been constructed. It contains the detectors for two transverse dropouts and three-or-more transverse dropouts out of four inputs. This unit operates from signals supplied by the first chassis of dropout detection equipment which contains the single dropout detector.

(T. C. Piper)

The Ampex FR300 Tape Transport has continued to exhibit "pack slip" in spite of various minor adjustments within the last few months. On January 12, the local Ampex representative eliminated the pack slip problem by drastically reducing the reel servo gains. This has eliminated the tape damage problem, and has allowed dropout testing to proceed. However, the reel servo transient response is now so slow that "long loop" and "short loop" stops occur frequently, and manual forward-reverse cycling is impossible.

(H. C. Brearley)

PART II

CIRCUIT RESEARCH PROGRAM

(Supported in part by the Office of Naval Research under Contract Nonr-1834(15).)

1. Summary of January Work

The work on flow-gating was interrupted during January due to an urgent need for an adequate theoretical formulation of the emitter-follower oscillation problem and the problems associated with transients in stabistors (H. Guckel). A program was begun to re-calculate the non-restoring AND and OR circuits to accommodate modified diode and transistor spread curves (J. Baur and J. Karge). Work on the transient behavior of transistors was brought to a close and some preliminary investigations on tunnel-diode circuitry begun (T. Kunihiro). Some of the essential results of the emitter-follower oscillation theory and the transient behavior of chains of transistor circuits will be given below.

2. Transistor Transients

The work reported on in last month's issue culminated in the following conclusions:

1. The transfer function of low-level injection, small base width, non-saturating switching circuits is represented by

$$G(s) = \frac{A}{1+sT}$$

where A = circuit amplification

T = characteristic circuit time

2. The inverse gain-bandwidth defined by k = T/A is a sort of inherent parameter of the transistor. k is directly related to the final speed of the system. It can be established that

$$k \cong \frac{(1 + \omega_\alpha R_L C_C)}{\omega_\alpha \alpha_0}$$

where

R_L = equivalent load resistance

ω_α = 2πx alpha cutoff frequency.

C_C = collector capacity

α_0 = zero frequency alpha

The chosen transistor will have a small C_C as well as a high ω_α. There is an optimum value of R_L to minimize k for a given required output voltage: This is due to nonlinearities in the transistor. The base impedance considerably increases k if $\omega_\alpha R_L C_C > 1$. Output impedances must be kept low.

3. In order that the designed machine behave stably, the stability factor F defined by $A \times E_{input}/E_{required} = F$ will be greater than a certain value. There is a minimum F for required stability ($\Delta t/t$), where t is the switching time. However in all cases F should be greater than 3.

There are two types of switching circuits in a system. One is the "gain less than unity" circuit and the other the "gain larger than unity". The former, denoted by D, acts like a delay unit with attentuation. The system using only the latter will be called the "distributed gain" system. The number of D's in a unit chain, which is a chain of D's separated by two adjacent W's, is given by

$$n = \frac{\ln \dfrac{1 + \dfrac{F}{A_0} + \dfrac{E_h}{E_r}}{2}}{\ln A}$$

where

A is the gain of D.

A_0 is the gain of W.

E_r is the required voltage swing.

E_h is the threshold voltage of W.

F is the stability factor.

If $n \geq 4$, then the average propagation time of the "concentrated gain" system is shorter than that of the "distributed gain" system and is given by the equation

$$\bar{t}_p = \frac{n+2}{n} k + \frac{n+1}{n} d$$

If $n \leq 3$, then the "distributed gain" system will be faster unless the output impedance of the circuit is considerably higher, and the average time delay will be given by

$$\bar{t}_p = \frac{3}{2} k + d \quad .$$

where d = delay in either one of the circuits (supposed to be identical for both types).

3. Stabistor Transients and Emitter Follower Oscillations

A. Stabistor Transients

The investigation was triggered by the transient behavior of stabistors. The device was examined to obtain the initial dc-tolerances. Fifty samples of both the SV 3143 and SV 3145 were tested to obtain a family of spread curves. A relatively large number was found to be outside specified units.

Dynamic tests, in standard circuits and a test circuit showed disturbing results. Under certain conditions a decaying transient is obtained which is typically as in Fig. 2.

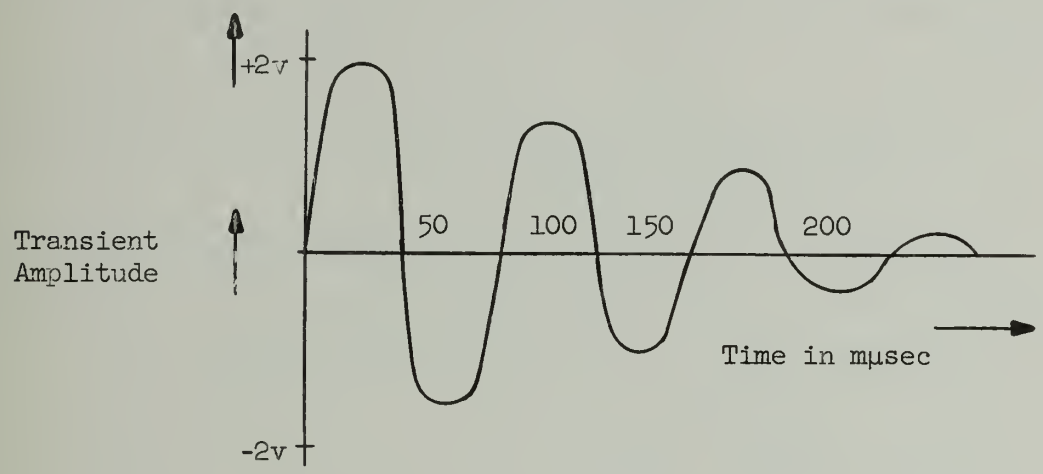

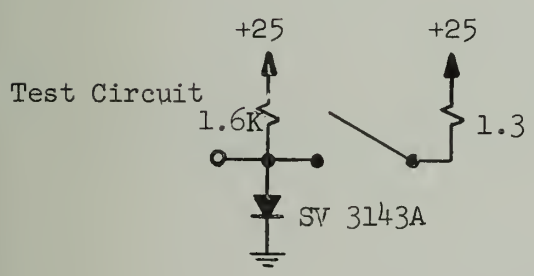

The transient is observed while the current through the stabistor is increased. No transient is observed when the current is decreased.

Figure 2
Transients in Stabistors

The transient is related to the amount of inductance in the circuit. The critical length of wire seems to be about six inches at a distance of 0.5" from the chassis. In the standard circuits overshoots with slight ringing can be observed. However, since diodes are used as couplers, a certain amount of isolation is obtained. The use of a 0.1 μf capacitor across the stabistor seems to be advisable.

B. Emitter Follower Oscillations

The problem is discussed in detail in File No. 313. The following is a summary of this report:

a) Cause

Emitter follower oscillations are caused by the behavior of the active device and its external effective generator impedances. It is important to realize, however, that the transistor by itself will not oscillate at frequencies below cut off. The device merely exhibits a negative real part of the base input impedance with an associated capacitive character. Hence, oscillations will result only if sufficient inductive generator impedance exists. A stabilization must therefore involve basically two things:

i) Removal of the negative real part by making the system either
   1) Short circuit stable
   2) Open circuit stable

ii) Removal of the capacitive character of the driving point impedance.

Quantitative results are as follows:

1. For short circuit stability it is required that

$$r_b' \leq \frac{4 R_E \omega_\alpha r_e^2 C_g}{5(R_E C_L - r_e C_g)}$$

$$C_g = C_L + C_e$$

R_E - External emitter resistance

C_L - External capacitive load

An effective lowering of r_b' is obtained by either of the methods indicated in Figure 3.

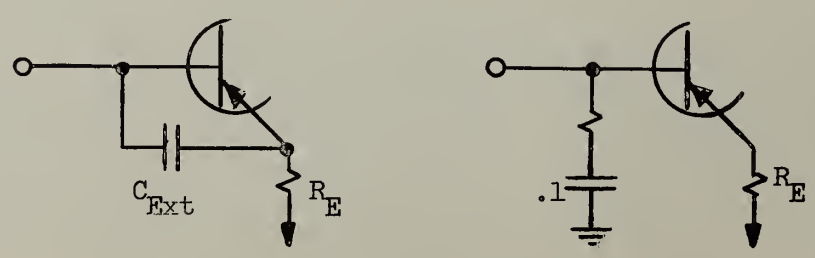

Figure 3
Compensating Circuitry for EF Oscillation

2. For open circuit stability it is required that

$$r_b' \geq 15{,}000 \text{ ohms, practically this is clearly impossible.}$$

Reduction of Capacitive Load:

1. Series inductance in emitter:

   The inductance required is approximately given by:

$$L \geq R^2 C \left(\frac{\omega}{\omega_\alpha}\right)^2$$

2. Shunt inductance in emitter:

$$L \approx \frac{1}{4\pi^2 f^2 C_L}$$

In general, the simplest criterion for marginal stability was found to be given by:

$$R_e C_e \approx \frac{1}{\omega_\alpha} = R_E C_L$$

If the system is to be stable it is required that

$$1 \geq \omega_\alpha R_E C_L$$

PART III

MATHEMATICAL METHODS

1. Sorting on the IBM 650 with three Magnetic Tapes (Supported in part by the Office of Naval Research under Contract Nonr-1834(27)).

The IBM 650 computer at the Digital Computer Laboratory has three magnetic tape units, model number 727. In many sorting schemes one pass over the data consists of merging N input streams of data onto N output streams; in this, each stream is represented by one physical tape unit. An output stream for the $k^{\underline{th}}$ pass becomes an input stream for the $k + 1^{\underline{st}}$ pass, and so forth. With the number of tape units we have the sorting strategy must be altered; clearly, a minimum of four units is required for the above strategy. Two sorting schemes using three tapes are described below. One of these has been programmed (by students in Mathematics 395) and an estimate of running time has been obtained. The other scheme is being programmed.

The first scheme is a radix sorting scheme, based on radix 2. A scheme of this type has the advantage that the number of passes is independent of the number of items to be sorted and depends only on the number of bit positions necessary to represent the largest item in the data. Unfortunately, radix 2 is not well suited to the IBM 650, which uses a radix 10 number representation. The first pass over the data consists of a decimal to binary conversion and on the last pass a conversion back to decimal is necessary. The two binary states are represented by the decimal characters 8 and 9 because of an order in the 650 which detects the presence of one of these characters in any desired digit position. Suppose now that the number conversion has been done, the data all being on tape I. Now the first sort begins. The sorting key is the least significant "bit" of the item and the sorting rule is that the item is written onto tape II if the key is "8" and onto tape III if the key is "9". When all items on tape I have been so processed, tapes I and III are rewound and then the contents of III are written onto the end of tape II and now tapes II and III are rewound. On the next pass, the sorting key is moved to the next higher order bit position. The input stream is now on tape II and the output streams are tapes I and III. The pattern should now be evident. The sort continues until all bit positions have been sorted on, as just described. This scheme is particularly convenient if the numbers being sorted are smaller than 1,024, for

then their binary representation requires only one word in the 650 (word length = 10 decimal digits). This sorting scheme is the one that has been programmed and the results of a test case are given below.

> For 200 items, the total running time (excluding read-in of the code) was three minutes; of this, about 80 seconds were used in the two number conversions. Each item consisted of the number on which the sorting was done and one word of ancillary information. Each number was assumed to require 10-bit positions for its represention. The code having these operating times was prepared by Mr. S. Naikelis.

The other sorting scheme is of the variety in which the number of passes increases logarithmically with the number of items to be sorted. The data are presumed to be stored initially on tape I. The data blocks on the tape are of fixed length, except for the last block. Tape I is read and an internal sort on each block is performed by the method of exchanging (see E. H. Friend "Sorting on Electronic Computer Systems" Journ. of the ACM 3, 134(1956))and alternate blocks are written onto tapes II and III. Tape I is rewound. Pairs of blocks, one block from tape II and the other block from tape III are now merged to form ordered pairs of blocks on tape I. When this merge is complete, tapes II and III are rewound. One half* of the pairs are transferred directly to tape III and now the pairs on tapes I and III are merged into ordered sets of four on tape II. The pattern should now be clear. This process continues, doubling the length of the ordered sets on each pass until the sort is complete. It is clear that the internal sorting phase could be extended, depending on the amount of internal storage. The saving in time achieved by this has not yet been carefully considered. Programs employing this scheme are in prepartion by students of Mathematics 395.

(L. D. Fosdick)

---

*round down if not an integer.

2. <u>An Approximation of the Exponential Function</u> (Supported in part by the Office of Naval Research under Contract Nonr-1834(27)).

A new approximation to the exponential function has been obtained. The Bernoulli numbers may be defined by the generating function

$$\frac{x}{e^x-1} = 1 - \frac{1}{2}x + \sum_1^\infty (-1)^n B_n \frac{x^{2n}}{2n!} = E(x) - \frac{1}{2}x,$$

where $B_1 = \frac{1}{6}$, $B_2 = \frac{1}{30}$, etc., and $E(x)$ is an even function of x.

It follows that $e^x = \frac{2E(x) + x}{2E(x) - x}$. If $F(x^2)$ is the polynomial obtained by truncating $2E(x)$ after the term in x^{2n}, then $G(x) = \frac{F(x^2) + x}{F(x^2) - x}$ is an approximation to e^x whose power series expansion agrees with the Taylor expansion of e^x up to the term in x^{2n}. $G(x)$ can be evaluated in n+1 multiplications and one division, while the Taylor series expansion of e^x requires 2n multiplications to obtain the same accuracy.

The coefficients of $F(x^2)$ can be modified to yield even higher accuracy. A program has been written which computes better coefficients in the following way: Given points $x_0 x_1 \ldots x_m$ and weights $w_0 \ldots w_m$ we compute relative errors

$$\Delta(x_i) = e^{-x_i}(e^{x_i} - G(x_i)) = 1 - e^{-x_i} G(x_i) .$$

A given perturbation $\mathcal{E}$ in the coefficient of x^{2k} in $F(x^2)$, defines a new function $G_k(x)$, and

$$\Delta_k(x_i) = 1 - e^{-x_i} G_k(x_i)$$

is also computed. Then $\Delta = (\Delta(x_0), \Delta(x_1), \ldots \Delta(x_m))$, and $\Delta_0, \Delta_1 k \ldots, \Delta_n$ are n+2 vectors each having m+1 components. A new set of vectors

$$\Delta_0^* = \Delta_0$$

$$\Delta_1^* = \Delta_1 + k_{10} \Delta_0^*$$

$$\vdots$$

$$\Delta_n^* = \Delta_n + \sum k_{ni} \Delta_i^*$$

$$\text{and } \Delta^* = \Delta + \sum k_i \Delta_i^*$$

are constructed, where the k_{ij} and k_i are

chosen so that these new vectors are orthogonal with respect to the given weights. The coefficients of $F(x^2)$ are modified in an analogous manner to obtain $G^*(x)$ whose error vector would be exactly Δ^* if only linear terms were involved and differs very slightly from this in practice. Since Δ^* is orthogonal to n+1 functions it may be expected to have a large number of changes of sign in the interval (x_0, x_m), and to have a small maximum absolute value in this interval. This was observed in the cases tried.

By modifying the spacing of the x's and the weights, an approximation $G^*(x)$ can be obtained in which the maximum error is very nearly minimized.

Hyperbolic and trigonometric functions can be expressed in terms of $F(x^2)$ and $F(-x^2)$ respectively.

(J. C. P. Miller
D. B. Gillies)

3. Unnormalized Floating Point Arithmetic

Various schemes for unnormalized floating point arithmetic have been proposed. See, for example, the Metropolis scheme and that proposed by Roger Farrell in File No. 235. In all such schemes which use unnormalized multiplication and division in conjunction with unnormalized addition and subtraction one may lose significant figures during certain calculations at a very rapid rate. An example of this occurs during the back substitution following triangulurization of a set of linear equations. The triangularized set of equations is given in the table below.

$$
\begin{array}{ll}
x_1 + x_2 + x_3 & = k \\
x_2 + x_3 & = k\,10^{-i} \\
10^{-2i}\,x_3 + x_4 + x_5 & = k\,10^{-i} + k\,10^{-2i} \\
x_4 + x_5 & = k\,10^{-i} \\
\hline
10^{-2i}\,x_{n-4} + x_{n-3} + x_{n-2} & = k\,10^{-i} + k\,10^{-2i} \\
x_{n-3} + x_{n-2} & = k\,10^{-i} \\
10^{-2i}\,x_{n-2} + x_{n-1} + x_n & = k\,10^{-i} + k\,10^{-2i} \\
x_{n-1} + x_n & = k\,10^{-i} \\
x_n & = k
\end{array}
$$

The solution to the set of equations is: $x_n = k$, $x_{n-1} = -k + k\ 10^{-i}$, $x_{n-2} = k, ---, x_3 = k$, $x_2 = -k + k\ 10^{-i}$, $x_1 = k$.

Let $\mathcal{E}_i$ be the difference between the true solution x_i and the machine solution. Let $\mathcal{E}$ be $1/2 \times 10^{-n}$, where n is the number of decimal digits of the fractional part of a number which a register holds.

If normalized arithmetic is used the error stabilizes at about $k\ 10^{2i}$ after x_{n-4} has been computed. On the other hand, if unnormalized arithmetic is used we obtain approximately the following sequence of erros. $\mathcal{E}_n = O(k\mathcal{E})$, $\mathcal{E}_{n-1} = O(\sqrt{2}\ k\mathcal{E})$, $\mathcal{E}_{n-2} = O\ (k\ 10^{2i}\mathcal{E})$, $\mathcal{E}_{n-3} = O\ (k\ 10^{2i}\mathcal{E})$, $\mathcal{E}_{n-4} = O\ (k\ 10^{4i}\mathcal{E})$, ---, $\mathcal{E}_3 = \mathcal{E}_2 = \mathcal{E}_1 = O(k\ 10^{(n-3)i}\mathcal{E})$.

A similar effect was observed experimentally by Farrell when lengthy sets of equations were solved by the two systems of floating arithmetic.

(D. E. Muller)

PART IV

ILLIAC USE AND OPERATION

New Illiac Codes

During the month of January eight new routines were added to the Illiac Library.

M14-M - 275 Real Determinant Calculation (DOI or SADOI). This routine originated in the MISTIC Laboratory (Michigan State University). This routine will compute the determinant of an n x n real matrix where n is less than 29. It is an auxiliary to the A1-M floating point routine. It may not be used with the A1-Illinois floating point routine.

EA1-M - 276 Floating Point Integration by Q_{66}, A Symmetrical 6th Degree Polynomial Approximation Quadrature Formula. This routine originated in the MISTIC Laboratory (Michigan State University) and must be used with A1-Illinois. It uses a seven term integration formula to integrate a function specified by a closed subroutine with an error proportional to the ninth power of the interval size.

H7-S - 278 Minimization of a Badly Conditioned Function of Two Variables (DOI or SADOI). This routine originated in the SILLIAC Laboratory (University of Sydney, Australia). This routine finds:

(1) The minimum of a function of two variables, F(X,Y),

(2) The range of values of the independent variables X and Y over which the function F differs from its minimal value by less than a specified amount ϵ, (i.e. the "errors" in X and Y),

(3) The value of an auxiliary function G(X,Y) at the minimal point of F, and

(4) The range of values of G over the region defined in (2) above.

The minimum point is found by a slow method which varies one variable at a time. In some badly conditioned cases it is superior to the faster steepest descent method in that,

(1) It works with functions which have discontinuous derivatives,

(2) It can be used to find the true minimum of a function with several subsidiary minima, and

(3) It provides an estimate of the accuracy of determination of the minimal point.

R6-S - 279 Fast Square Root (DOI or SADOI). This routine originated in the SILLIAC Laboratory (University of Sydney, Australia). This routine is intended for use in place of the standard square root routine R1 in those programs where time taken by the square root routine is of more importance than the store space occupied by it. The time saved by using R6 is appreciable only for numbers less than 1/10. For uniformly distributed numbers in the range 0 to 1 the average duration is 5.6 milliseconds as compared to the 6.0 milliseconds of R1. However, for numbers appreciably smaller than 1/10 the maximum duration is 9.0 milliseconds, whereas R1 may take as long as 30 milliseconds.

S12-S - 282 Sub-routine for Calculating either

$$\phi(x) = \frac{2}{\sqrt{\pi}} \int_0^x e^{-t^2} \, dt$$

or

$$e^{-x^2} .$$

This routine originated in the SILLIAC Laboratory (University of Sydney, Australia).

T6-S - 283 Fast Sine-cosine Routine (DOI or SADOI). This routine originated in the SILLIAC Laboratory (University of Sydney, Australia). This routine extends and makes more varied the facilities offered by routines T1 and T5. The features of these routines are shown in the following table:

CODE	RESULTS GIVEN	DURATION	NO. OF WORDS	UNITS IN ARGUMENT
T1	1/2 Sine 1/2 cosine	20 ms.	30	Radians
T5	Sine	9 ms.	19	Half Revolutions
T6S	Sine cosine	10 ms.	30	Half Revolutions

X16 - 284 "Current Floating Relativizer" SADOI Modification to be placed on program tape. This is a special fast interlude to modify SADOI while it is in the Williams Memory, which a programmer can add to his tape in order to give SADOI an additional facility.

It is frequently desirable to have a local address reference in a program. Entries to subroutines, and references to locations a few orders in front or in back of the present location are frequently made. Symbolic addresses are frequently used for this purpose.

Use of this routine, however, creates a new termination symbol SO which means "location of this order". This termination may be used in the same manner as normal S - parameters, in that the address nSO means "Williams Memory location of this order plus n". (n is mod 1024).

(John Ehrman)

S13-S - 285 Fast low accuracy exponential routine (DOI or SADOI). This routine originated in the SILLIAC Laboratory (University of Sydney, Australia). This routine will compute 2^x for $-1 \leq x < 0$. If this is not satisfied the result will be meaningless. It has a duration of 2.5 milliseconds and an error less than 5×10^{-7}, whereas the standard exponential subroutine S4-212 has a duration of 11.3 milliseconds and a maximum error of 5×10^{-12}.

Illiac Usage

During the month of January specifications were presented for 29 new problems. This list does not indicate how the Illiac was used because large amounts of machine time may have been consumed by problems with numbers less than 1584 T. Numbers followed by T are for theses.

1584 T Agricultural Economics. Forecast of Hog Prices. Illiac is to be used to discover through correlation analysis the best combination of variables with which to forecast hog prices. The hog prices forecast will be used in a spatial analysis problem.

1585 Botany. Variance of Local Lesion Assay. In an assay of virus by the local lesion method the results can be expressed as:

$$Y = N(1 - e^{-ax})$$

where Y = lesions observed,
N = unknown parameter,
a = unknown parameter,
and x = fractional concentration of virus.

Because of high variability in Y, analysis of variance design is appropriate. In order to apply analysis of variance the requirement of homoscedasticity must be met. In this case the variance is an increasing function of Y. This function is as yet unknown, but will be sought.

1586 T Animal Science. Muscle Creatine in the Baby Pig. Illiac will be used to determine if testosterone and creatine compounds will affect the rate of gain in baby pigs. The method of statistical analysis to be used is the fitting of constants.

1587 T Psychology. Personality Correlates of Field Dependent Perceptual Behavior. The problem involves an assessment of the hypothesized relationships between individual differences in the ability to make accurate perceptual judgments in visually distorted fields, and individual differences in certain aspects of personality; for example, behavioral dependency, intelligence, psychological mindedness.

The problem analysis is entirely correlational. Items in a 72 item questionnaire will be intercorrelated by the Phi program, items in a 49 item rating scale will be intercorrelated by K-8, and the resulting correlations dimensionalized by the centroid and varimax routines; and finally, seven subsets of 29 experimental variables, each subset involving about 20 variables, will be intercorrelated by the K-8 routine.

1588 Bureau of Educational Research. Delta Coefficient. The delta coefficient is a kind of correlation coefficient to be used for ordinal categorical scores with many ties.

Given two sets of measurements taken on a group of subjects, the computation of delta is made as follows:

1. In a skeleton table taking measurement 1 as rows and measurement 2 as columns; frequencies are filled to form a scatter plot.
2. Cumulative frequencies in each cell of the table described above, both in terms of rows and columns, are found to generate a new matrix.
3. Diagonal cross products are computed for each 2 x 2 table in the above matrix and summed.
4. This sum is adjusted in terms of product moments of rows and columns totals.

1589 T Digital Computer Laboratory. Three Shock Intersection. The equations of hydrodynamic flow (including viscosity) are linearized in various neighborhoods of a triple shock intersection. The conservation equations then lead to eight algebraic equations which should determine possible shock configurations. These equations are to be solved.

1590 State Water Survey. Extrapolation Drop Distributions. The equation

$$V_x \frac{\partial f(x,t,h)}{\partial h} - \frac{1}{2}\int_0^x f(y,t,h)\, f(x-y,t,h)\, c(y,x-y)\, dy + f(x,t,h)\int_0^\infty f(y,t)\, c(x,y)dy = 0$$

will be evaluated by numerical integration. $f(x,t,h)$ represents the frequency distribution of the drop masses, x, at a height h and at time t. $c(y,x)$ is a collection efficiency based on Langmuir's efficiency, the differences in fall velocity, and the area of the drop. The numerical equation which will be solved is

$$\Delta F_i = \frac{\Delta H}{V_i}\left\{\left(\frac{1}{2}\sum_{j=1}^{j=i-1} F_j\, F_{i-j}\, C_{i-j,j}\right) - \left(\sum_{j=1}^{20} F_i\, F_j\, C_{i,j}\right)\right. .$$

This will be repeated for various theoretical cloud size distributions F as well as for actual drop size distributions measured at the ground.

1591 Sociology. Social Factors in Traffic. The aim of this research is to estimate factors associated with traffic generation in cities of the size and nature of Champaign-Urbana. Social characteristics of households, size, socio-economic status, place of residence, number of cars, etc. will be correlated with the number of trips reported for a sample of households interviewed in an origin-destination survey in Champaign-Urbana in 1958.

From this correlation it should be possible to predict the amount and purpose of traffic generation through multiple regression coefficients. The computation would be to prepare a correlation matrix and several subsets of multiple r's. A separate correlation matrix would also be prepared by make and year of car as it relates to trip generation.

1592 T Civil Engineering. Static and Dynamic Analysis of Multigirder Highway Bridges. The object of this study is to develop general procedures for determining the static and dynamic response of multigirder highway bridges under moving vehicles.

It is intended to develop separate programs for:

a. The static problem.

b. The dynamic problem.

a) The deflection of the structure for static loads is in the form:

$$w = w_0 \sum_m \sum_n \phi_{mn}\, Y_n(y) \sin m\pi \frac{x}{a}$$

where $Y_n(y)$ are known functions of y, and ϕ_{mn} are numerical coefficients to be determined. The problem is reduced to the solution of a system of linear algebraic equations (one system for each value of m):

$$[A_m]\ [\phi_m] = [C_m]$$

where $[A_m]$ is a square matrix whose elements are functions of the geometric and physical properties of the structure. $[\phi_m]$ is a column matrix of the unknown coefficients. $[C_m]$ is a column matrix whose elements depend on the loading. This program will 1) compute the elements of the matrices $[A_m]$ and $[C_m]$ within the machine; 2) solve the equations to obtain ϕ_{mn} coefficients; and 3) evaluate deflections and moments at selected points.

b) The deflection of the structure for the dynamic case is in the form:

$$w = w_0 \sum_n f_n X_n(x,t)\ Y_n(y)$$

where $Y_n(y)$ are known functions of the y-coordinate, $X_n(x,t)$ are known functions of x and t; and f_n are functions of time to be determined.

The determination of f_n involves the solution of a set of n second order linear differential equations with variable coefficients. The value of n may range from 5 to 10. It is likely that the Library Routine F1 will be used for the solution of the system of differential equations.

This program will 1) solve the differential equations; 2) evaluate deflections and moments at selected points; and 3) make a comparison of the static and dynamic effects.

1593 Student Counseling Service (Chicago). Study of the Comparative Usefulness of the CCT-CQT-FGE Tests. The comparative usefulness of three different batteries of scholastic aptitude tests (CCT, CQT, and FGE) for predicting grade-point-averages is to be determined. Standard library routines will be used for calculating multiple correlations and zero-order product-moment correlations.

1594 Civil Engineering. Effect of Radial Stress on Curved Beam Deflection. The problem is to determine the effect of radial stress on the deflection of curved beams. A general solution in non-dimensional parameters has been written for this problem. Numerical results for extreme values of the parameters involved in the solution are desired.

1595 Student Counseling Service (Chicago). Gordon Personality Scales as Predictors of Withdrawal-Drop Criterion. Standard library routines of Illiac will be used in computing various multiple correlations between predictor test scores and a dichotomous withdrawal-drop criterion.

1596 Digital Computer Laboratory. Ergodic Process Message Generator. A stochastic process where the probabilities of occurrence of subsequent events depend upon the previous occurrence of events is called a Markoff process. Of primary importance to communication theory and other areas as well is a sub-class of Markoff processes called ergodic. Ergodic is difficult to define, but a characteristic of an ergodic process is that any reasonably large sample of events which occur subject to the restraints of a Markoff chain is representative of the sequence of events as a whole.

A computer routine has been prepared which will generate sequences of teletype characters for any level Markoff chain including zero level. A set of teletype symbols, the original message, is read into the machine and stored on the drum. Parameters specify the Markoff level and the number of characters to be considered a basic unit. The chance messages that are generated by the routine are representative of the message as a whole. At the same time since a random quality has been added, the message will consist of novel combinations of the original message basic units, but always the units will occur with the same probabilities as those in the original message. Thus, if the original message consists of German prose, the generated messages will tend to be German prose. If the original message consists of a style of music encoded in teletype symbols, then the generated messages should be music in a similar style. If the symbols used represent moves in some game strategy, then the messages generated also will be moves of a game.

The full use of the routine suggests many experiments. Initially, however, the routine will be used to generate English poetry. At various Markoff levels messages of English poetry will be generated.

1597 Mathematics. Investigation of Random Normal Deviates. A sequence of numbers which are randomly, normally distributed with variance σ^2 and mean zero is to be generated. An estimate of the mean (supposing that the mean and variance are unknown) with a certain accuracy will be made. The sense in which

the accuracy is defined determines a rule for stopping after n numbers have been drawn (generated) and estimating: mean $= \frac{1}{n}\sum_{1}^{n} X_i = \bar{X}_n$. The accuracy is defined in terms of the variance of $\bar{X}_n$; however, since the variance of each X_i is presumed unknown, only a confidence interval for the variance of $\bar{X}_n$ can be given. At present the stop criterion will be

$$\frac{\sum_{1}^{n} (X_i - \bar{X}_n)^2}{n-1} \leq na - \frac{k}{\sqrt{n}}$$

where k, a are constants determined by the accuracy desired. Later different stopping rules may be used. Let n_j denote the number of random numbers drawn during the jth trial and let $\bar{X}_{nj}$ denote the estimate of the mean on the jth trial. Suppose this be done N times. Then

$$E(n) = \frac{1}{N} \sum_{j=1}^{N} n_j$$

$$\text{var}\,(\bar{X}_n) = \frac{1}{N} \sum_{j=1}^{N} \bar{X}_{nj}^{\,2} .$$

This procedure is repeated for many σ^2s plotting E(n) versus σ^2 and var$(\bar{X}_n)$ versus σ^2.

1598 Agricultural Economics. Supply Response of Hog Producers. An analysis of the response of hog producers in altering their production pattern as prices and other external circumstances change will be made. Data from 138 producers for a 13 year period will be analyzed. Regression procedures will be employed, first to the annual data (13 sets), then a time series analysis will be performed on the annual totals. The standard K-14 routine will be adequate for all of the computations.

1599 Physics. Differential Equation: Nonlinear, Cubic, Periodic Variation of Periodic Coefficient. In problem #1160 the equation $x'' + p(t)\, x^3 = 0$ was studied, where p was a square wave with equal time positive and negative. The effect of varying the proportion of positive and negative time for the forcing function is to be studied. The previous program needs to be modified but slightly.

1600 T Mining and Metallurgical Engineering. Stresses in Sedimentary Mine Roof Rocks. Sedimentary beds overlying an underground mine can be considered as continuous plates supported by pillars of various shapes and sizes. Part of the problem of solving for the stresses in mine roofs is the calculation of the moments and shears in the plate, due to uniform loads, by the use of finite difference equations. A few solutions of plates supported by pillars of relatively small sizes are available. However, no solutions are available for pillar sizes, shapes, and patterns such as are encountered in underground mines.

The use of the Illiac is necessary for solving the simultaneous equations that define the deflections of the plate. A number of typical plates will be analyzed. Individual problems will require from 1/2 to 2 hours for their solution.

1601 United States Department of Agriculture. Reservoir Sedimentation. Field surveys were carried out by the Agricultural Research Service on lakes in several states to measure the volume of water and sediment in each lake. A number of such lakes were surveyed during 1959 as a part of a continuing research program to measure reservoir sediment. Computation is necessary on the data from each lake. It would require about 100 man-hours of computation time on a hand calculator to obtain the 1959 results.

The formula which must be solved to obtain the results may be written as follows:

$$V = \left(\frac{h_1 W_1 + h_2 W_2}{87120\ (3)}\right) \left(\frac{E_1 + E_2}{W_1 + W_2}\right) + \frac{A}{3} \left(\frac{E_1}{W_1} + \frac{E_2}{W_2}\right) + \left(\frac{h_3 E_3 + h_4 E_4 + \ldots + h_n E_n}{130,860}\right).$$

Where E_1 = Downstream cross sectional area of water or sediment

E_2 = Upstream cross sectional area of water or sediment

W_1 = Width of downstream cross section

W_2 = Width of upstream cross section

h_1 = Perpendicular distance from upstream shore line to downstream cross section on the right side looking upstream

h_2 = Perpendicular distance from downstream shore line to the upstream cross section on the left side looking upstream

A = Surface area of lake between cross sections

E_3 = Cross sectional area side bay on the reservoir

h_3 = Perpendicular distance from a side bay cross section to center of the main channel

1602 Institute for Research on Exceptional Children. Maternal Child-Rearing Attitudes. A rotated factor analysis of 180 maternal attitude questionnaires of 76 items each will be made. This is part of a 5 year special class project, wherein the child rearing attitudes of 120 mothers of retarded children and 60 mothers of normal children are to be investigated.

1603 Digital Computer Laboratory. Solution of a System of Differential Equations. The following system of (3) differential Eq. will be numerically integrated by routine F1, over an interval of ten cycles of the solution; results are to be plotted on the data plotter.

$$\left.\begin{aligned} y_0' &= Ay_0 + By_1 \\ y_1' &= y_2 \\ y_2' &= y_1 \end{aligned}\right\} \quad \text{while } y_1 - \frac{1}{2}\, y_0 \geq 0$$

$$\left.\begin{aligned} y_0' &= Cy_0 \\ y_1' &= y_2 \\ y_2' &= -y_1 \end{aligned}\right\} \quad \text{while } y_1 - \frac{1}{2}\, y_0 < 0$$

1604 Theoretical and Applied Mechanics. Nonlinear Mechanical Vibrations. A set of four nonlinear differential equations describing the behavior of two bodies interconnected with nonlinear springs, dampers, and snubbers is to be solved with library routine F1. All constants and coefficients of the various terms are specified on the input tape. The output is to be photographic, teletype, data plotter, or a combination of these, depending on the specification tape.

1605 Digital Computer Laboratory. Rational Function Approximation to e^x. A highly efficient method for computing e^x is to use the formulas:

$$E(x) = 1 + \frac{1}{12}\, x^2 - \frac{1}{720}\, x^4 + \ldots,$$

$$e^x = \frac{E(x) + 1/2\, x}{E(x) - 1/2\, x}$$

where $E(x)$ is an even polynomial obtained from the Bernoulli expansion. Several more decimal places of accuracy may be obtained if the coefficients of $E(x)$ are adjusted to minimize the maximum relative error over the range of x, rather

than use the first equation above, which gives the best approximation at $x \cong 0$. The program computes adjusted coefficients for polynomials of various degrees (4 to 12) and for any range $-R \leq x \leq R$. Double precision is required since final 14 decimal accuracy depends on intermediate numerical differentiation.

1606 State Water Survey. Stream Flow. The study involves the analysis of approximately 50 years of stream flow records at 145 stations in Illinois to determine the frequency distribution of drought periods having durations of 3 months to 5 years.

Monthly totals will be used in the:

(1) Calculation of moving averages for periods of 3-, 6-, 12-, 18-, 24-, 36-, 48-, and 60-months.

(2) A complex sorting will follow to obtain ranked independent data for determination of the frequency distribution.

(3) A least squares fit may be used to determine a frequency curve for the data sample from (2).

The necessary Illiac routines for calculating the moving averages and for the sorting process will be developed. In fact, the sorting code has already been developed under problem number 1511. The running total code has been written and the program for steps (1) and (2) have been assembled into a complete program with N14 for input, S5 for natural logarithms, and P16 for output.

1607 T Structural Research. Dynamic Response of Simply Supported Cylindrical Shell. The displacements of a simply supported cylindrical shell are computed using Newmark's β-method of numerical integration of the acceleration caused by a time dependent force pulse traveling transversely to the longitudinal axis of the shell.

The routine for integration is similar to Illiac routine F3 and integrates the simultaneous differential equations:

$$\ddot{X}_i = w^2_0 \, [F_i(t) - Q_i]$$

where

$\ddot{X}_i$ is the acceleration of the ith node point

w_0 is the fundamental frequency

$F_i(t)$ is the external force at the ith node as a function of time

Q_i is the resistance of the shell to displacement.

1608 Chemistry. Nuclear Magnetic Resonance Spectroscopy. The object of the present research is to investigate the signs of nuclear spin-spin coupling constants in molecules containing fluorine and hydrogen nuclei. The absolute magnitudes of these constants are available in many cases directly from experiment (High Resolution Nuclear Magnetic Resonance Spectra), but in order to get the relative signs one has to calculate by means of theory the spectra that one would expect for various combinations of signs and then using the experimental spectrum decide the signs by comparison.

Information on the relative signs of nuclear spin-spin coupling constants is of vital importance at present in the verification and extension of quantum mechanical theories concerning these quantities. It is proposed to use a program that is already available (vide Problem No. 1524) for theoretically calculating the nuclear magnetic resonance spectra. Since the mathematical details have been already given there they shall not be repeated here.

1609 Electrical Engineering. Analysis of Faraday Rotation from Artificial Earth Satellites (I). This program finds the ray trajectory of radio waves from artificial satellites by integrating Hamilton's equations in the form given by Haselgrove[1]. Extraordinary and ordinary rays are found separately and the Faraday Rotation is calculated for a given electron distribution of the ionosphere.

Auxiliary subroutines of this program calculate earth magnetic field (see problem #1531), refractive index in a magnetoionic medium (Happleton-Hartree formula)[2], and electron density for different models of the ionosphera.

The results will be used to study the Faraday rotation and blending of the rays. A method to computate the electron distribution in the ionosphere from signals received from artificial satellites is sought.

[1]Haselgrove, T., Report of the Physical Society Conference on the Physics of the Ionosphera, Cavendish Laboratory, Cambridge, Sept. 1954.

[2]Booker, H. G., An Outline of the Magneto Ionic Theory - Part I, Technical Report No. 1, School of Elec. Eng., Cornell University, Ithaca, New York, March 1950.

1610 Animal Science. Magnesium Requirement by Rats. The problem involves effects of levels of dietary magnesium and calcium, and environmental temperature on distribution of magnesium and calcium in blood and bone and

on weight gain of 504 albino rats. The method of least squares will be used to analyze the data.

1611 Psychology. Personality Factors in Persuasion. This study tests hypotheses about the interaction of personality variables and types of prior belief defense in conferring resistance against persuasion. Approximately 264 subjects were tested on about 90 variables.

Illiac will be used to obtain correlations of the 90 variables, to perform a Centroid Factor Analysis extracting about 10 factors, and a Varimax rotation will be done on the Factor Analysis.

1612 Institute for Research on Exceptional Children. Family Study. The responses of 110 children of ages 10 to 16 inclusive to 21 items relating to social-emotional (as contrasted to instrumental) aspects of behavior will be factor analyzed.

Each child responded to a list of 50 items covering a broad spectrum of activity. Responses were made in terms of child's perception of both his mother's and his father's dissatisfaction with his performance of each activity.

The 21 items regarded as social-emotional were selected from the total listing of 50 items by the judges.

A standard routine will be used to calculate a matrix of Phi coefficients. If inspection of the Phi matrix indicates that further analysis is justified, standard routines will be used to extract principal axis factors and rotate for orthogonal simple structure.

Table I shows the distribution of Illiac machine time for the month of January.

TABLE I

	Hrs:Min	
Scheduled Maintenance	77:04	
Unscheduled Maintenance	27:52	
Drum Engineering	12:36	
R.A.R.	1:49	
Leapfrog	6:08	
Wasted	1:42	
Library Development	10:02	
		137:13

TABLE I
(cont'd.)

Use by Departments

	Hrs:Min
Demonstrations	3:40
Classes	8:50
Aeronautical Engineering	:29
Agricultural Economics	5:50
Agronomy	5:13
Animal Science	4:28
Botany (NIH G-E3013)	:15
Bureau of Economic and Business Research	:09
Bureau of Educational Research (PH-M1839)	1:27
Bureau of Educational Research	3:53
Chemistry (NSF G-5907)	:13
Chemistry (Nonr 1834(13))	1:31
Chemistry (NSF G-7336)	4:11
Chemistry	61:40
Coordinated Science Laboratory	41:37
Digital Computer Lab. (AEC AT(11-1)-415)	16:29
Digital Computer Lab. (Nonr 1834(15))	:51
Digital Computer Lab. (NSF G-9503)	11:49
Digital Computer Lab. (Nonr 1834(27))	3:16
Digital Computer Lab. (DA-36-039-SC56695)	1:04
Digital Computer Laboratory	15:15
Economics	:02
Electrical Engineering (NOBSR 64723)	:54
Electrical Engineering (AF 33(616)6079)	:42
Electrical Engineering (NSF G-7421)	:34
Electrical Engineering (NASA-NSG 24-59)	1:20
Electrical Engineering	7:21
Food Technology	9:41
Institute of Communications Research	1:07
Institute Res. on Exceptional Children	:50
Liberal Arts and Sciences	:40
Mathematics	6:37
Mechanical Engineering	11:45
Medicine, College of	:40
Mining and Met. Eng. (TRUS AF6770)	:23
Mining and Metallurgical Engineering	:11
Music	:15
Physics	21:23
Psychology (M-1733)	6:57
Psychology (1715)	1:34
Psychology (MD 2060)	:35
Psychology (Nonr 1834(11))	10:58
Psychology (SAE 8383)	6:34
Psychology (AF 49(368)371)	:50
Psychology	21:01

(cont'd.)

TABLE I
(cont'd.)

	Hrs:Min		
Sociology	4:13		
State Natural History Survey	:03		
State Water Survey (DA-36-039-SC75055)	10:27		
State Water Survey	1:45		
Structural Research (IHR-46)	:05		
Structural Research (NSF G-6572)	5:19		
Structural Research	33:26		
Student Counseling	1:50		
Theo. and Appl. Mech. (NOBS 72069)	:13		
Theo. and Appl. Mech. (ORD 593)	:43		
Theo. and Appl. Mech.	:11		
Zoology	:33		
Purdue University	:55		
Stanford Research Institute	2:26		
		367:13	
			504:26

Error Frequency and Analysis

The machine is normally used for "engineering" and maintenance between 7 a.m. and 10:30 a.m. Since the periods between 7 a.m. and 10:30 a.m. together with certain irregular periods, such as Saturdays and Sundays, are devoted to a heterogeneous group of engineering, maintenance, and laboratory functions, it is more instructive, from an error standpoint, to look at the periods between 10:30 a.m. and 7 a.m. of the next day in order to make an observation of the error frequency in the machine. This is the actual period when the machine is designated for use, although certain engineering procedures frequently require the scheduling of extra maintenance time. With this in mind, a summary table has been prepared using the period between 10:30 a.m. and 7 a.m. of the next day. This table lists the running time when the machine was operating, the amount of time devoted to routine engineering, the amount of time devoted to repairs because of breakdowns, and a number of failures while the machine was listed as running. Each failure was considered to have terminated a running period and was followed by a repair period in preparing this table. Since the leapfrog code is our most significant machine test, the length of time which it has been used on the machine is listed separately,

together with the number of errors associated with that particular code. This information for the month is presented in Table II.

It is important to notice that, except during scheduled engineering periods, any interruption of machine time that was not planned is considered a failure in this table. In rare cases, where the failure is not known until a later time, it is possible that no repair period is associated with the failure. This over-all system has been adopted because it makes it possible for a machine user to estimate directly the probability that the machine will be "running" any instant of time and the probability of a failure during any given interval of running time.

Table III presents a summary of errors or interruptions for January.

TABLE III

Input	2
Output	1
Reader	1
Punch	2
Memory	2
Control	1
Drum	8
Power	3
Camera	3
Runover of Scheduled Maintenance into Production Time	1
Unknown	10
Total	34

TABLE II

DATE	RUNNING OK TIME	REPAIR TIME	SCHEDULED ENGINEERING	INTERRUPTIONS OR FAILURES STOPPING OK TIME	TYPES OF INTERRUPTIONS OR FAILURES CAUSING REPAIR TIME	WASTED	LEAPFROG	FAILURES STOPPING LEAPFROG
1/4/60	20:43	:04	3:13	4	(1-3) Unknown, (4) Camera failure	0	:00	0
1/5/60	20:26	:04	3:30	4	(1) 100v Power failure (2) Camera failure (3-4) Unknown	0	:00	0
1/6/60	20:23	:00	3:37	0		0	:00	0
1/7/60	18:21	2:16	3:23	2	(1) Output trouble (2) Memory 2^{-10}	0	:00	0
1/8/60	20:01	:29	3:30	1	(1) Memory pos. 2^{-36}	0	:00	0
1/11/60	20:13	:17	3:30	2	(1) Punch errors (2) Drum failure	0	:00	0
1/12/60	15:36	4:01	4:23	2	(1) Punch trouble (2) Control error	0	:00	0
1/13/60	14:32	6:07	3:21	3	(1) Drum failure (2-3) Unknown	0	:00	0
1/14/60	19:29	1:01	3:30	1	(1) Drum failure	0	:00	0
1/15/60	19:56	:09	3:55	1	(1) Reader "H" failure	0	:00	0
1/18/60	20:17	1:13	2:30	2	(1) Line voltage failure (2) Unknown	0	:20	0
1/19/60	20:01	:01	3:58	1	(1) Unknown	0	:00	0
1/20/60	21:32	:00	2:28	0		0	:00	0
1/21/60	21:02	:00	2:58	0		0	:00	0
1/22/60	16:32	4:27	3:01	2	(1-2) Drum failure indicated	0	:00	0
1/25/60	19:04	1:31	3:25	4	(1) Unknown (2) Drum failure (3-4) Input failure	0	:00	0
1/26/60	16:20	4:25	3:15	1	(1) Drum failure	0	:00	0
1/27/60	18:37	2:40	2:43	2	(1) Runover of maint. into prod. time (2) Drum failure	0	:00	0
1/28/60	21:11	:12	2:37	2	(1) Camera (2) Line voltage failure	0	:00	0
1/29/60	21:25	:00	2:35	0		0	:00	0
TOTALS	385:41	28:57	65:22	34		0	:20	0

PART V

IBM 650 USE AND OPERATION

New IBM 650 Codes

During the month of January one 650 routine was revised and four new routines were added to the IBM 650 Library.

Revised X8' - 54' Random Card Layout Unpacking Routine. This is a revised version of the Library routine previously described in the October 1959 Technical Progress Report. The revised routine provides for slightly more generality and provides a more complete description of the use of the routine.

(L. Matsunaga)

X9' - 60' Modification to "Tape SOAP II A". The modification referred to is one comprised of three cards which write Tape SOAP II A onto the tape on 8015 as that deck is read in by the usual procedure.

A three card deck is also provided to replace the SOAP deck preceding a deck of symbolic cards to be assembled. These three cards read Tape SOAP II A from tape unit 8015 and transfer control to it, after which time SOAP-ing procedes exactly as usual. This modification permits a much faster loading of the SOAP program into the computer than does the usual card loading procedure. After once loading this deck it is then considerably more practical to alternate SOAP-ing jobs with programs which destroy the SOAP program in the computer.

(R. H. Flenner)

E1' - 61' <u>Floating Point Simpson's Rule Quadrature with Round-off Error Reduction</u>. The routine computes F, using Simpson's Rule where

$$F = \int_A^B y(x)dx .$$

The Simpson's Rule algorithm for the evaluation of F is

$$F \cong \frac{B-A}{3n} [y_0 + 4y_1 + 2y_2 + 4y_3 + \ldots + 4y_{n-1} + y_n]$$

where

$$y_i = y(A + ih),$$

$$h = \frac{B-A}{n} .$$

This program performs the summation in the algorithm in a special way, designed to reduce the floating point roundoff error. The terms in the algorithm are first added together in groups so that each group contains the same number of approximately equal addition operands. In this way the amount of normalization with consequent roundoff error which must be done by the computer is minimized.

(L. D. Fosdick)

M5' - 62' <u>Lower Triangle of the Product Matrix M^TM</u>. This program reads a matrix M from tape, computes the lower triangle of the matrix M^TM (sum of squares and cross products matrix), and writes the computed matrix on tape.

(M. A. Fisherkeller)

K4' - 63' <u>Analysis of Variance by Method of Fitting of Constants</u>. This is a complete program consisting of four independent subprograms. It carries out on the IBM 650 the same procedure as that carried out by Illiac Routine K15-258. The functions of the four parts of the routine are:

Part 1:

Reads the observation matrix (m x n) from cards, where m is the number of rows and n, the number of columns. Writes a matrix, M, (m x n') on tape whose elements may be transformations and/or products of the elements read in. The rows of the observation matrix may be weighted.

Part 2:

Reads a matrix M, (m x n') from tape, computes and writes on tape the lower triangle of the matrix M^TM, (n' x n').

Part 3:

From the sum of squares and cross products matrix M^TM, gross "sums of squares" are written on the output tape; the matrix equation is solved for the k (number of dependent variables) constant vectors; the inverse and the constants are written on the output tape; and, "accounted for sums of squares" are computed and written on the output tape.

Part 4:

Prints on-line the output tape from Part 3.

(M. A. Fisherkeller)

IBM 650 Usage

During the month of January specifications were presented for 9 new problems. This list does not indicate how the IBM 650 was used because large amounts of machine time may have been consumed by problems with numbers less than 72' T. Numbers followed by T are for theses.

72' T Marketing. A Comparison of Projective and Non-Projective Techniques in Marketing Research. This problem specification represents a continuation of the statistical analysis begun with Problem Number 53'. This project is a comparison of a projective technique with a non-projective technique in marketing research. 300 consumers were interviewed, 150 with the former method and

150 with the latter method covering the same question subject matter. The responses produced are being compared along various dimensions of analysis to ascertain whether either technique is superior in consumer interrogation.

Statistical analysis consists of frequencies of response for each subsample. These frequencies are then compared by chi square analysis to ascertain whether significant differences are produced. In addition, data are cross tabulated by demographic and personality attributes of respondents. These frequencies also are assessed by chi square analysis to indicate whether cross tabulation produces significant variations in response.

In 53' the necessary frequency counts were produced. Now it is necessary to apply chi square analysis to these data to ascertain the significance of variations produced. The 650 will be utilized for this purpose. A small amount of supplementary tabulation is also necessary.

73' Bursar's Office. Payroll Retirement Calculation. Current pay detail cards, with retirement system contributions precalculated at 7% of gross, and temporary adjustments to current pay will be combined with the year-to-date earnings record on tape for all employees. It is necessary to accumulate new year-to-date earnings and test this amount against $8000, the amount at which the contribution is reduced to 6%. (On the first $8000, a 1% deduction is added to the normal 6% for the Survivors Benefit program.) If the current pay will cause the year-to-date earnings to exceed $8000 this period, the current pay must be apportioned between the amount under $8000 and the amount over $8000. The retirement deduction is recalculated to take 7% of the former and 6% of the latter. A card is punched for each of these amounts; these two cards will replace the regular pay card during the processing of this period's payroll.

The earnings record on tape will show the year-to-date earnings, the year-to-date amount subject to 7% retirement, the year-to-date amount subject to 6% retirement, and the total retirement contribution to date.

This calculation and adjustment is necessary because according to the laws governing the system, the proper amount must be deducted on a current basis; delayed adjustments after the checks are written are not allowed. In addition, the Retirement System must post to their records as separate items the amount of Survivors Benefits and the actual retirement amount.

Since employees are not required to enter the retirement plan until after a year of employment, and they enter at various times, it is necessary to differentiate between total earnings during the year and those subject to retirement deductions.

74' Psychology. Predicting Advanced Stages of Learning. The general problem is to investigate whether later stages of academic learning are predictable from the same predictor battery as early stages. Several specific problems arise in connection with this: can different scores be taken together without appreciable loss of information; are there more factors than one; etc.

The variables are course-grades in an Aviation high school and ratings by different teachers of student behavior inside and outside the classroom. Factor analysis, especially of the ratings, will be used to decide whether it makes sense to keep the ratings separate or whether the Halo-effect is such that one composite will contain most of the relevant information.

The validity of predictor variables will not only be tested, as is often the case, against first semester or first year grades, but also against grades and ratings in later years. The intercorrelation between the years will be studied; and hypothesis quasi-simplex in the Guttman sense will be found.

75' T Agronomy. Quantitative Inheritance of Height in Dwarf Corn. The aim of this study is to test the validity of Mather's theory of estimating genetic variance by fitting the empirical values obtained by the use of this theory to multiparental crosses.

The computations required involve a large number of variance estimates and their breakdown into the various genetic and environmental components. The computer is to be used for estimating within group variance.

76' T Civil Engineering. Determination of Shear Stress-Strain Curve from a Torsion Test. The inelastic flexure deformation of beams may be determined from tensile stress-strain relationships which are obtained from standard tests. The inelastic shear deformation of beams possibly may be treated in a similar way by obtaining shear stress-strain characteristics from a standard torsion test. The data obtained from the torsion test is reduced to a useable

form through the solution of the following relationship:

$$\tau = \frac{3T + \theta \frac{\partial T}{\partial \theta}}{2 \pi r^3} .$$

Where: τ = Shear stress

T = Torque (experimental observation)

θ = Angle of twist (experimental observation and related to strain)

r = Radius of torsion couple

77' Civil Engineering. Calculation of Minor Head Loss. The problem consists of calculating the head loss (difference in energy) due to a change in diameter in a pipe. It involves essentially a system of selecting the proper data from a table stored within the program. The program is written as a subroutine.

78' T Chemistry. Crystal Structure of $BaS_2O_3 \cdot H_2O$. This problem is a continuation of the general crystal structure problem, earlier phases of which were completed or are in progress under the problem numbers of 62' T and 63' T. This program will take the calculated structure factor data from a theoretical choice of the coordinates of the atoms in the unit cell and compare these values with those observed experimentally. The degree of agreement is an indication of the accuracy of the theoretical choice.

79' Bureau of Educational Research. Analysis of Sociograms Using Matrix Algebra-Program. A program is under development to determine members of a group matrix which form specific subgroups. The program will do the analysis described by Harary and Ross[1] which successively reduces the order of the matrix in determining the size or strength of the subgroups. Successful development of this program will enable one to solve the matrix at arbitrary response level dicotomization as well as plan future studies based on using this technique.

[1]A Procedure for Clique Detection Using the Group Matrix, Frank Harary and Ian C. Ross, Sociometry, Vol. XX, No. 3, September, 1957.

80' T Chemistry. Calculation of Molecular Effusion Parameters from Experimental Data. This problem involves the measurement of the intensity of

molecules effusing from orifices of various geometric shapes as a function of the angle from the normal to the orifice.

The experimental data consist of ion current readings, I_θ, at several points located at a fixed distance, r, from the orifice but making different angles, θ, with the normal to the plane of the orifice such that $0^\circ \leq \theta \leq 90^\circ$ and $\Delta\theta = 1^\circ$. The points lie in a plane which contains the normal to the orifice plane.

Approximately six orifices will be studied. Each orifice will be studied by forty runs. Each run consists of ninety I_θ vs. θ readings; a total of 21,600 readings all told. The following quantities must be calculated.

For each I_θ: $U_\theta = CI_\theta$ where C is a constant for each orifice

$$G_\theta = \frac{\int_0^\theta I_\theta \sin\theta \, d\theta}{\int_0^{\pi/2} I_\theta \sin\theta \, d\theta}$$

$$P_\theta = \frac{I_\theta}{2\pi \int_0^{\pi/2} I_\theta \sin\theta \, d\theta}$$

For each run:

$$N = 2\pi \; C \int_0^{\pi/2} I_\theta \sin\theta \, d\theta$$

For each orifice:

Compare the P_θ's for each run with the P_θ for a particular run.

P_θ/P_θ (particular run)

$P_\theta - P_\theta$ (particular run)

Table I' shows the distribution of the IBM 650 machine time for the month of January.

TABLE I'

	Hrs:Min	
Regular Maintenance	14:32	
Unscheduled Maintenance	12:27	
Library Development - DCL	12:22	
Library Development - SSU	:05	
Log Summary	:37	
Demonstration	:40	
Wasted	29:41	
		70:24

TABLE I'
(Cont'd.)

Use by Departments

	Hrs:Min		
Agronomy	9:56		
Chemistry	3:43		
Civil Engineering 297-497	4:30		
Mathematics 295	22:18		
Mathematics 395	11:27		
Physics	:13		
Psychology	:20		
Statistical Service Unit	55:40		
Structural Research	10:47		
Theor. and Appl. Mechanics	1:01		
		119:55	
			190:19

Error Frequency and Analysis

The IBM 650 is normally on from 8 a.m. to 5 p.m. The machine is used for preventive maintenance from 8 a.m. to 12 noon on Wednesdays.

Table II' gives the daily breakdown of machine time with respect to wastage and unscheduled maintenance.

Table III' presents a summary of errors for January.

TABLE III'

407	4
533	1
Power failure	2
Storage unit	3
Floating point	4
Tape units	2
Lower accumulator	5
Total	21

DATE	RUNNING OK TIME	SCHEDULED ENGINEERING	REPAIR TIME	WASTED	FAILURES STOPPING OK TIME	TYPES OF FAILURES CAUSING REPAIR TIME
1/4/60	4:14			4:46	0	
1/5/60	7:52			1:45	1	407 had a bad relay.
1/6/60	2:48	2:07	:36	3:29	5	(1-5) Blank bits in pos. 9 of lower accumulator.
1/7/60	7:08		:35	2:02	3	(1) 407 had bent connectors. (2) Sign not read from tape. (3) Floating point hang up.
1/8/60	8:24		:30	:26	1	407 printing extra 0's and * at random.
1/11/60	6:49			2:11	0	
1/12/60	8:46		:45	:44	1	Card jam on 533. Removed.
1/13/60	5:55	4:00			0	
1/14/60	9:51			:14	0	
1/15/60	9:01			:09	0	
1/18/60	8:30		3:30	:17	0	Engineering for what appeared to be tape control unit - actually programming problem.
1/19/60	7:05		1:50	:05	2	(1-2) Storage unit hang up.
1/20/60	4:48	4:00		:12	0	
1/21/60	7:06		2:25	1:24	1	Bad circuit breaker in the 407.
1/22/60	5:29		:15	3:16	3	(1-3) 3 floating point hang ups.
1/25/60	7:53			1:07	0	
1/26/60	6:52	:47		1:21	0	Scheduled engineering on the 407.
1/27/60	3:58	3:38		1:24	0	
1/28/60	5:42		1:12	2:06	3	(1-2) Fuse light on 650 came on - power shut off. (3) Tape unit 2 would not rewind from console.
1/29/60	5:28		:49	2:43	1	Storage unit error light when clearing drum.
TOTALS	133:39	14:32	12:27	29:41	21	

PART VI

GENERAL LABORATORY INFORMATION

Seminars

"Basic Operation of the Main Arithmetic Unit of the New Computer", by Richard R. Shively, Digital Computer Laboratory, University of Illinois, January 4, 1960.

"Some Programming Aids for Maniac III", by Prof. Herbert Kanner, University of Chicago, January 11, 1960.

"Exponent Arithmetic Unit and Floating Point Addition", by Algirdas A. Avizienis, Digital Computer Laboratory, University of Illinois, January 18, 1960

Reports

Report No. 96, "A Theory of Asynchronous Circuits III", by W. Scott Bartky, Digital Computer Laboratory, University of Illinois, January 6, 1960.

Personnel

The number of people associated with the Laboratory in various capacities is given in the following table:

	Full-time	Part-time	Full-time Equivalent
Faculty	10	2	11.5
Research Associates	1	-	1.0
Graduate Research Assistants	4	29	20.0
Graduate Fellows	1	-	1.0
Administrative and Clerical	5	-	5.0
Other Nonacademic Employees	25	2	26.0
Totals	46	33	64.5

The Laboratory Advisory Committee consists of Professors H. C. Brearley, L. D. Fosdick, D. B. Gillies, G. A. Metze, D. E. Muller, T. A. Murrell, W. J. Poppelbaum, J. E. Robertson, J. N. Snyder and A. H. Taub.

Physics

UNIVERSITY OF ILLINOIS

GRADUATE COLLEGE

DIGITAL COMPUTER LABORATORY

TECHNICAL PROGRESS REPORT

PART I - HIGH-SPEED COMPUTER PROGRAM

PART II - CIRCUIT RESEARCH PROGRAM

PART III - MATHEMATICAL METHODS

PART IV - ILLIAC USE AND OPERATION

PART V - IBM 650 USE AND OPERATION

PART VI - GENERAL LABORATORY INFORMATION

February, 1960

PART I

HIGH-SPEED COMPUTER PROGRAM

This work is supported in part by Contract No. AT(11-1)415 of the Atomic Energy Commission and in part by the University of Illinois. Contract No. AT(11-1)415 is supported jointly by the Atomic Energy Commission and the Office of Naval Research.

A. Logical Design

1. Tolerance Analysis of Matrix Logic Circuitry

Tolerance analysis of the matrix logic circuitry comprising the MAU pseudo-adder is in process. In conjunction with the immediate goal of analyzing the adder, some time has been given to the search for a reliable, systematic approach for selecting (determining) the combination of parameter values which will yield worst case DC performance of a matrix circuit.

Consider an output voltage V as a function of the n-tuple $(K_1, K_2, \ldots, K_n)$, where the K_i are the parameters of the network (input voltages, supply voltages, resistance values, etc.). Each K_i has the range $\left\{\underline{K_i}, \overline{K_i}\right\}$. Then the objective of this analysis is to determine the minimum and maximum values which V can obtain for $(K_1, \ldots, K_n)$ in its allowed range. The most difficult portion of the problem is that of determining what values of the K_i lead to worst case V.

The approach being used is based upon the qualified assumption that the sign of $\frac{\partial V}{\partial K_i}$ is independent of the value of $(K_1, \ldots, K_n)$ for $K_j \in \left\{\underline{K_j}, \overline{K_j}\right\}$. The results obtained will still be valid under the modified assumption that if $\frac{\partial V}{\partial K_i}$ does change sign over the allowed range of $(K_1, \ldots, K_n)$ then $\left|\frac{\partial V}{\partial K_i}\right| \ll \max. \left\{\frac{\partial V}{\partial K_j} \;\middle|\; j \in \{1, 2, \ldots, i-1, i+1, \ldots n\}\right\}$ for either $\frac{\partial V}{\partial K_i} < 0$ or $\frac{\partial V}{\partial K_i} > 0$ (or both).

Operationally, the above assumption restricts the necessary choice of worst case parameter values to the binary choice $K_i = \underline{K_i}$ or $K_i = \overline{K_i}$. Further, it allows the choice to be made after just one test for each

parameter, necessitating only n tests to be performed rather than the 2^n tests required if the only assumption is that of being able to make a binary choice for each parameter.

The procedure, then, is:

a) Compute $V(\underline{K_1}, \ldots, \underline{K_n})$;

b) Compute $V(\underline{K_1}, \ldots, \underline{K_{i-1}}, \overline{K_i}, \underline{K_{i+1}}, \ldots, \underline{K_n})$;

c) Compare the result of b) with that of a). If the result of b) is larger, then $\overline{K_i}$ becomes an element of the worst case n-tuple, $(K_1, \ldots, K_n)_w$; otherwise $\underline{K_i}$ is chosen. Perform b) and c) for each i.e. $\{1, 2, \ldots, n\}$.

d) Compute maximum V using $(K_1, \ldots, K_n)_w$ and minimum V using the complement of $(K_1, \ldots, K_n)_w$.

A partial check of the results may be performed as follows: After computing $V(K_1, \ldots, K_n)_w$, perturb each K_i from the value determined in c) above and sense the sign of ΔV under this perturbation. If $V(K_1, \ldots, K_n)_w$ is indeed maximum then ΔV must in all cases be negative (or zero). Such a test should increase the reliability of the analysis considerably.

If the collector dissipation of an input emitter follower is not to be exceeded, then one additional restriction is necessary on the use of matrix logic: an input emitter follower cannot drive two AND internal wires which are positive simultaneously, if at the same time all OR diodes connected to the AND internal wires are back biased. Fortunately this situation does not occur in the MAU adder logic.

(J. A. Resh and R. R. Shively)

2. Exponent Arithmetic Unit

Requirements for the operation of the Exponent Arithmetic Unit during multiplication, integer multiplication and division were established. Exponent Arithmetic Unit operation sequences during these operations have been determined and incorporated into the Exponent Arithmetic Unit design.

(A. A. Avizienis)

B. Core Storage

The core memory organization was completed this month. This was followed by a complete count of all components for one, 4096-word memory and submission of orders for these components. The total number of transistors is 3963, of which 2416 are for current drivers and sense amplifiers.

Preliminary studies of the physical layout of the memory were completed.

(S. R. Ray)

C. Input-Output and Auxiliary Storage

Work was continued on the skew measuring circuit mentioned in the January report. A very simple trial circuit gave encouraging results.

(R. L. Cummins)

The equipment to measure transverse dropouts in up to four channels was checked out, and data was taken on a reel of Ampex C-1 tape at a tape speed of 150 in./sec. and a packing density of 450 bits/inch. This tape had been installed in January, after the reel servo gains had been reduced to eliminate the pack slip. Early in its life, this reel produced dropouts totaling about 40 bits per channel per full reel pass. After about five weeks of use (600 full reel passes) average dropout rates per 3600 ft. pass were:

Single channel, single bit	141 bits
Two channels, single bit	326 bits
Two adjacent channels (13, 14), double bit	36 pairs
Two non-adjacent channels (11, 14), double bit	32 pairs

When the tape was stopped at the location of a double bit dropout, it was found that the tape was creased across its full width, apparently from being folded in an unnoticed occurrence of pack slip. More conclusive data will be taken on an undamaged reel of C-1 tape.

(C. N. Liu and T. C. Piper)

Work was continued on the remote control electronics for the FR300. At present, the function of this remote control unit will be:

1. Automatically cycle full-reel runs of tape in both directions.
2. Automatically cycle back and forth over a given length of tape.
3. Generate pulse trains and actuate the transport accordingly in order to determine program restrictions.

The J-element was re-designed and work begun to justify the design (using Sir Kittsolver 2).

(L. J. Peek, Jr.)

D. General Organization

A number of changes in design have been proposed in order to be able to produce a simpler computer sooner. The gates in the main arithmetic unit which allow a number to be shifted 2 base 4 digital positions left or right will be eliminated. This has no effect on division, but adds about 6 shifts to an average multiplication, and doubles the number of shifts in floating addition if the exponent difference is very large. However for small differences in exponent - a far more common case in practice - this will have very little effect on the speed of addition. The number of separate cases in floating addition has been reduced to 5 by eliminating the special cases in which the exponents agree or differ by exactly one register length, and also those cases in which the exponent difference is so large that exchanging registers at the beginning allows a faster time of operation. The number of registers in the flow-gating memory can be reduced by 3 by removing one data buffer register and two extra registers. There would then be 11 flow-gating registers. The program interrupt facility is considered to be a fairly difficult design problem which is not necessary for efficient computer operation at the start. The machine will be designed in such a way that program interrupt can be designed and incorporated after the machine is working.

An alternative floating point arithmetic scheme was proposed and described in File No. 311. This scheme has the advantage of being significantly simpler than the one presently contemplated, while yet permitting the programming of higher than single precision arithmetic. It is somewhat more difficult to use in double precisi but has the property that the sum of two single precision numbers is always represented exactly.

(D. B. Gillies and D. E. Muller)

A survey of library routines for the new computer was begun. This includes listing routines required, and a preliminary description of each one, with special attention to the assembler. Preliminary versions of some routines have been programmed.

(M. A. Fisherkeller, J. Flenner and R. H. Flenner)

E. Test Unit Number 2

During February very exhaustive tests were run on both controls for the test unit. Both of these controls make some use of replyback signals from the driver chassis. It was found that these circuits had to be disabled since the stray capacity between control output circuits and replyback busses was sufficient to cause system oscillations.

The clock control was tested first and it will be recalled that this unit was designed to run faster than the registers could be expected to shift accurately. Then the time for the control would be increased until satisfactory operation of the register was attained. After extensive tests it was concluded that the clock control could not be modified to provide satisfactory operation but rather would require complete re-design. Although the unit operated at about 30 μsec. per shift as predicted, the output waveforms were not usable and in addition, the speed of operation could not be satisfactorily increased as expected. One of the main problems with the clock control was the asymmetric flipflop used as the memory element. The asymmetric triggering operation is attained by using a diode in series with each of the two lines feeding the base of the input transistor. In the circuit used there were several portions of the operating cycle during which both of these diodes were backbiased leaving the base to seek its own voltage level. Since the base was still coupled to the circuit at high frequencies by transistor and stray capacity, this condition was conducive to ringing and bursts of oscillations. As a result of these findings the high speed testing of the register was done by modifying the speed independent control.

As mentioned above, the replyback signals necessary for operation of the speed independent control were disabled and thus the result and control was actually another clock. As a result the circuit was modified to produce a clock operating at an average shift time of 75 μsec. per shift. The shift

times were not, however, equal and one of the shifts was no more than 45 mμsec. long at the 0.6 volt point. It is encouraging to note though, that with optimum conditions as far as gating signals are concerned, satisfactory shifting was accomplished in this amount of time. This should only be interpreted as the minimum shift time for an "F" element and not as the time for a shift of the total register. This shift time was attained with only 16 bits in the register and all 16 being driven from the same driver chassis. In addition special precautions had to be taken to insure that the UP and DOWN gate signals did not occur simultaneously even for a very short time. This point is so critical that all the information in the register could be lost due to a transient pulse on either UP or DOWN gate lines.

As a result of these findings the speed independent control design will be modified to provide mutually exclusive UP and DOWN gates and to incorporate the new driver system.

(R. E. Swartwout)

PART II

CIRCUIT RESEARCH PROGRAM

(Supported in part by the Office of Naval Research under Contract Nonr-1834(15).)

A. Summary of February Work

Apart from the recalculation of the tolerances in the non-restoring circuits (J. Baur and J. Karge) which will be reported in the next issue, work was concentrated in the area of flow gating (H. Guckel and T. Kunihiro) and the first results in the field of tunnel-diode circuitry (T. Kunihiro) were obtained. The latter two subjects will be discussed in the following sections.

B. Flow Gating

A read-in driver according to Figure 1 was designed. Assuming a 10% variation in the Zener diodes for level-shifting, the minimum input signal required is $\pm$ 1.5v. An upper bound of $\pm$ 3.5v is imposed on the signals. The output can supply 120 ma at 20v; no current is furnished at 6v. Since the 2N560 is rated for a peak current of 400 ma and not all of this is used, a speed-up capacitor C_1 was inserted. This uses up the current rating during transients. The driver shows fairly fast transient behavior at the 20v $\longrightarrow$ 6v transition, but rather slow recovery times. Figure 2 shows the two times as a function of the (capacitive) load <u>without</u> a speed-up capacitor. If C_1 = 500 μμF is inserted, t_{op} goes down to less than 60 mμs for all loads less than 200 μμF.

C. Tunnel-Diode Circuitry

A circuit philosophy in which tunnel-diodes are used as voltage amplifiers and (fast) emitter-followers as current amplifiers furnishing directivity was set down and experiments undertaken to verify the feasibility of such an asynchronous system. It is felt that such a tunnel-diode emitter-follower combination will not handicap the switching performance of the system because the base-to-collector path is not used. The advantage over the synchronous system using periodic resetting of the tunnel-diodes (and 3 phases to obtain directivity) is obviously that no high-powered fast pulse sources are required.

Figure 3 shows three possible topologies which can be used as flipflops.

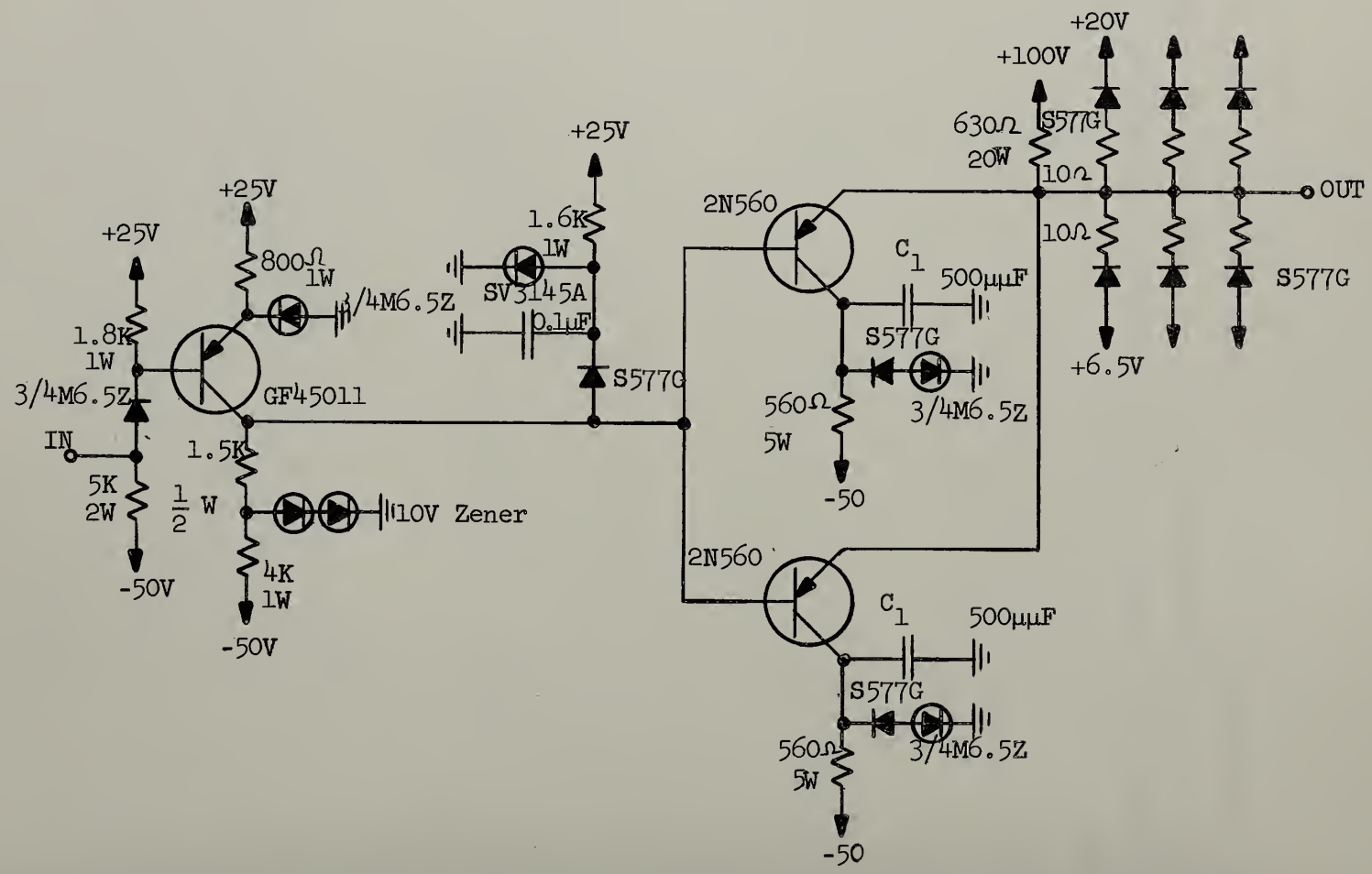

Figure 1
Flow Gating Read-in Driver

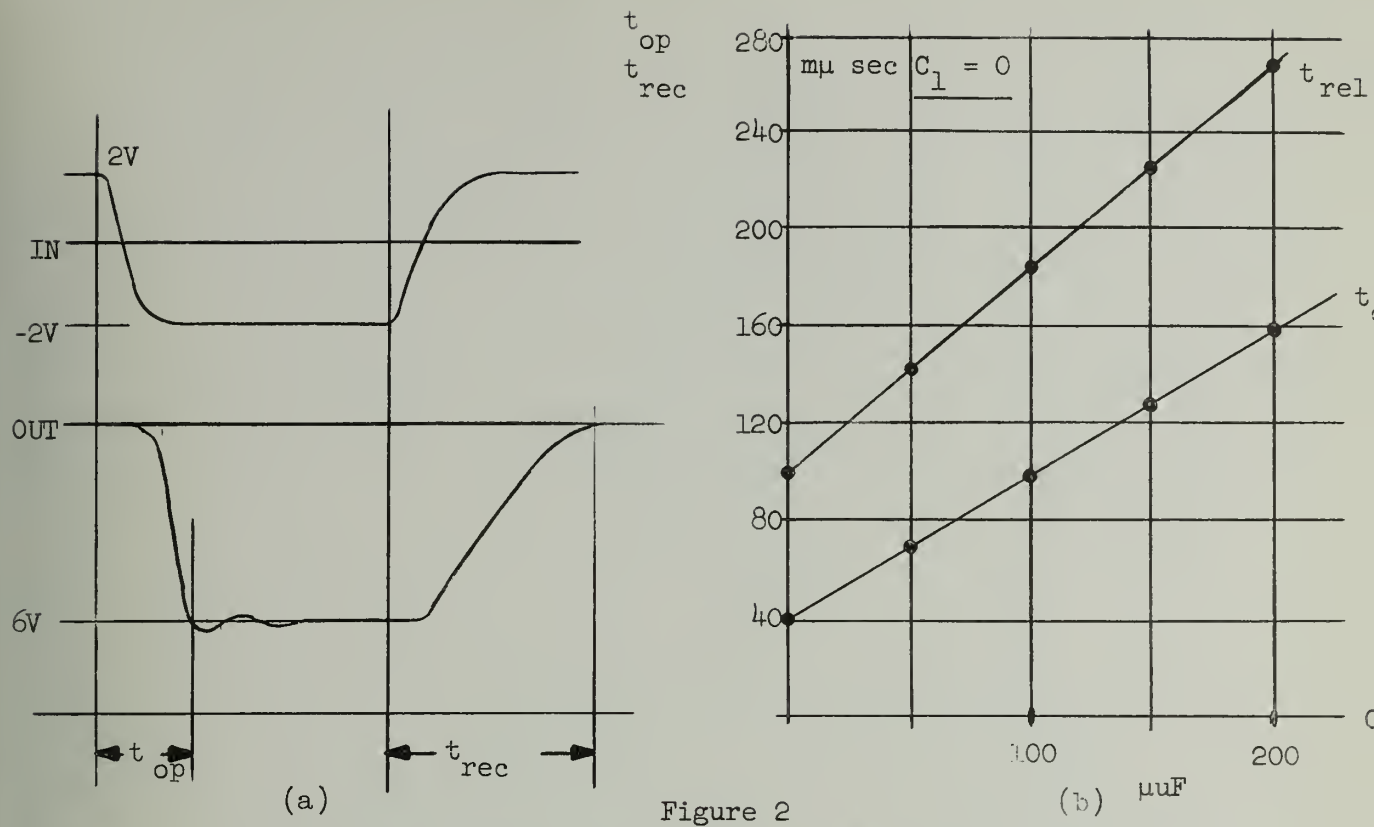

Figure 2

Switching Time of Driver vs. Capacitance of Load

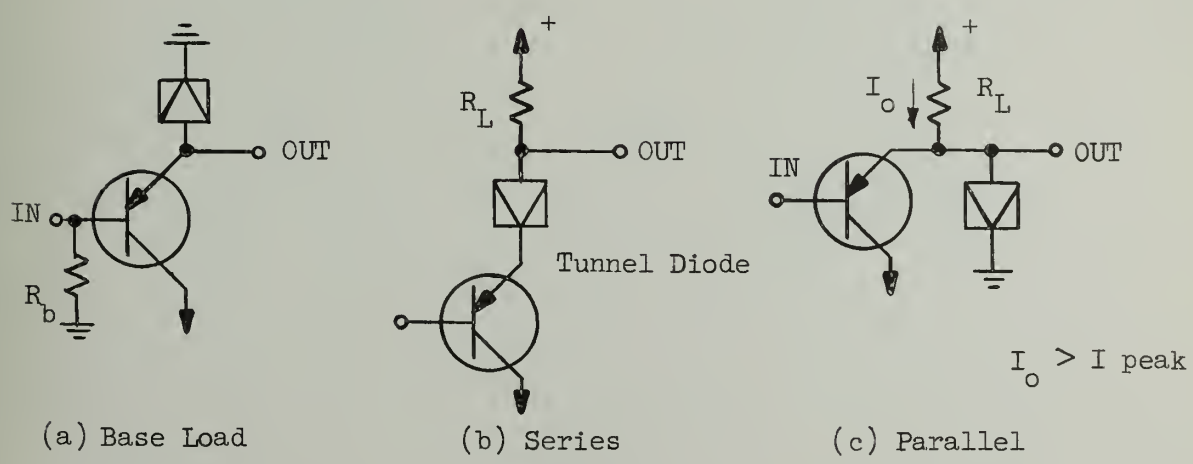

Figure 3

Direct Coupled TD-EF Combination Used As A Flipflop

There are many dc-coupling problems and dc-drop compensating circuits are being investigated. It turns out that solution (c) is easier to design tolerance-wise.

Figure 4 shows an EXCLUSIVE OR with an ac-bias superimposed on the inputs of the tunnel-diodes. Directivity is again obtained by emitter followers. The frequency of this bias (6mc with Fairchild tunnel-diodes and GF45011 transistors together with S577G level-shift diodes) must be below the lowest cut-off frequency in the chain. The idea behind this system is to periodically swing the input current into the high-sensitivity region near the first peak of the characteristic. The amplitude of such an ac-bias is very critical while its phase and the actual waveform are without importance. Tolerance conditions can be improved considerably by this procedure.

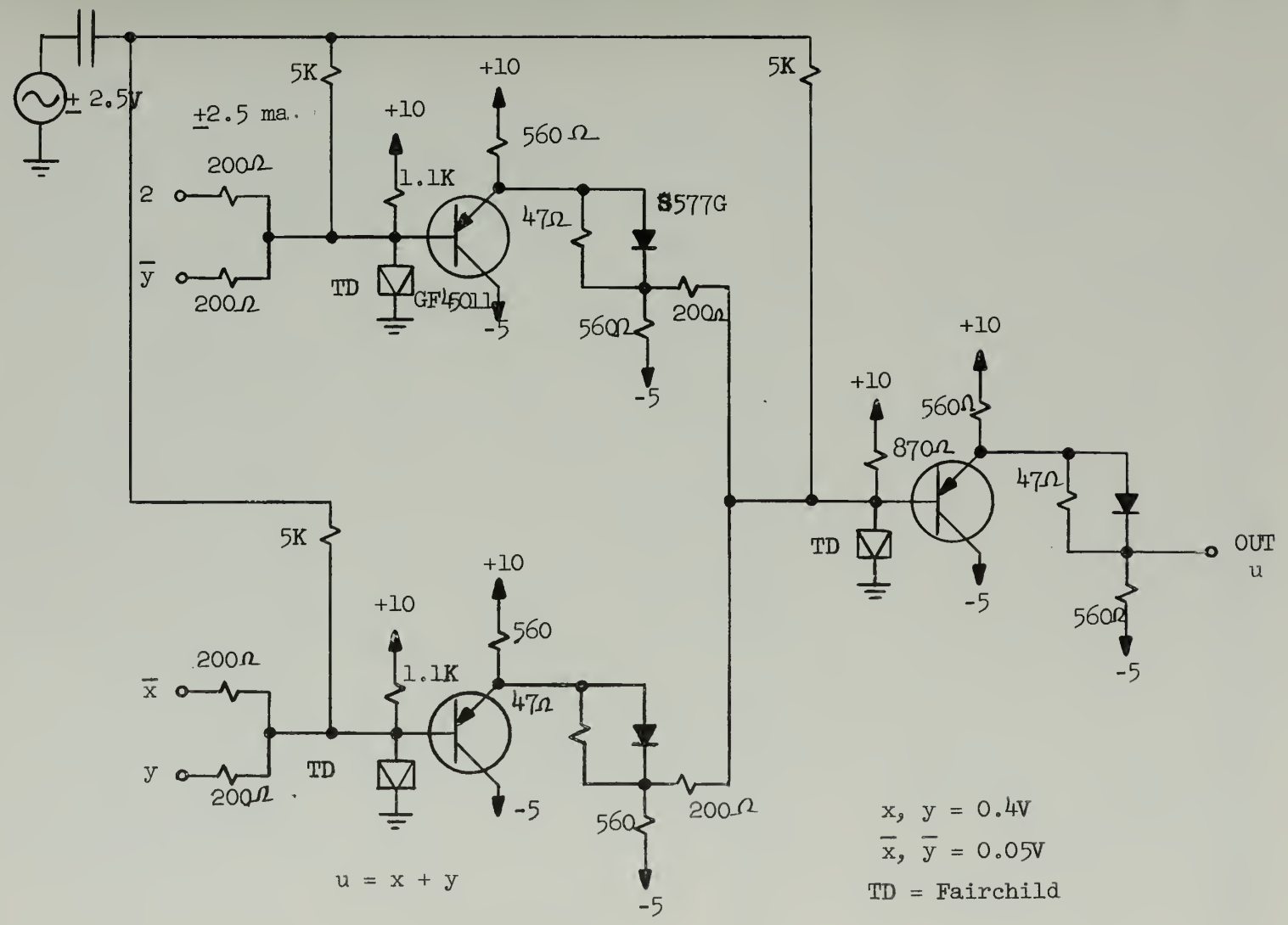

Figure 4
EXCLUSIVE-OR with AC bias

PART III

MATHEMATICAL METHODS

A. Order-Disorder Monte Carlo Computations (Supported in part by the Office of Naval Research under Contract Nonr-1834(27).)

An independent check on some of the calculations performed by the SPINNAKER program (see Technical Progress Report, October 1958 and May 1959) has been obtained. In correspondence with Dr. Lester Guttman of General Electric it was found that he has done a number of calculations of the same type, though differing in detail, as was done with the SPINNAKER program. In some cases the system parameter values he used were identical to those used by us. Good agreement in the results was found in those cases where a direct comparison was possible.

(L. D. Fosdick)

B. The Solution of Circuit Equations by SIR KITTSOLVER (Supported in part by the Atomic Energy Commission under Contract AT(11-1)415.)

The Illiac program known as SIR KITTSOLVER (see "A Program For Calculating Node Voltages and Branch Currents in Circuits with Non-Linear Elements", by L. D. Fosdick, File No. 287) has now been used successfully on a wide variety of circuits. The most complicated of these, in terms of numbers of elements, is the circuit shown in Figure 5. This circuit is a reply-back Eccles-Jordan flipflop with a 1-1 forbidden state. When the initial conditions for the computation favored the stable state of this circuit the computing time was twenty minutes. When the initial conditions favored the other state, which for the given parameter values would not hold, the computing time was forty-one minutes.

There has been one notable case in which the program has failed to converge to a solution. The circuit for this case is the memory sense amplifier shown in Figure 6. The reason for failure to converge has not been found. The factor λ, which controls the extent of the correction to the node voltage (see File No. 287) has been reduced to very small values with no success. The study of this problem continues.

(L. D. Fosdick)

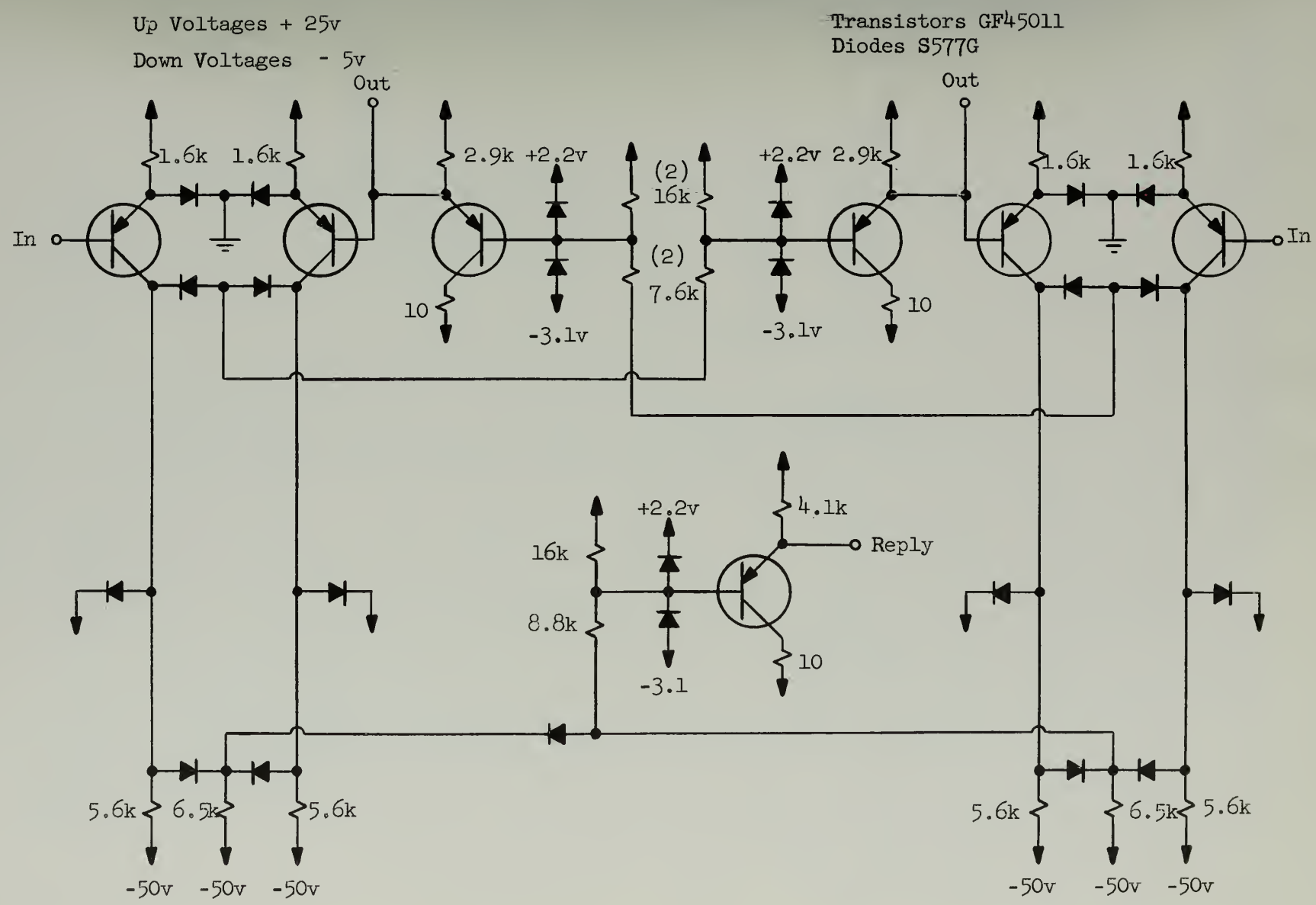

Figure 5
Reply-back Eccles-Jordan Flipflop with a 1-1 Forbidden State

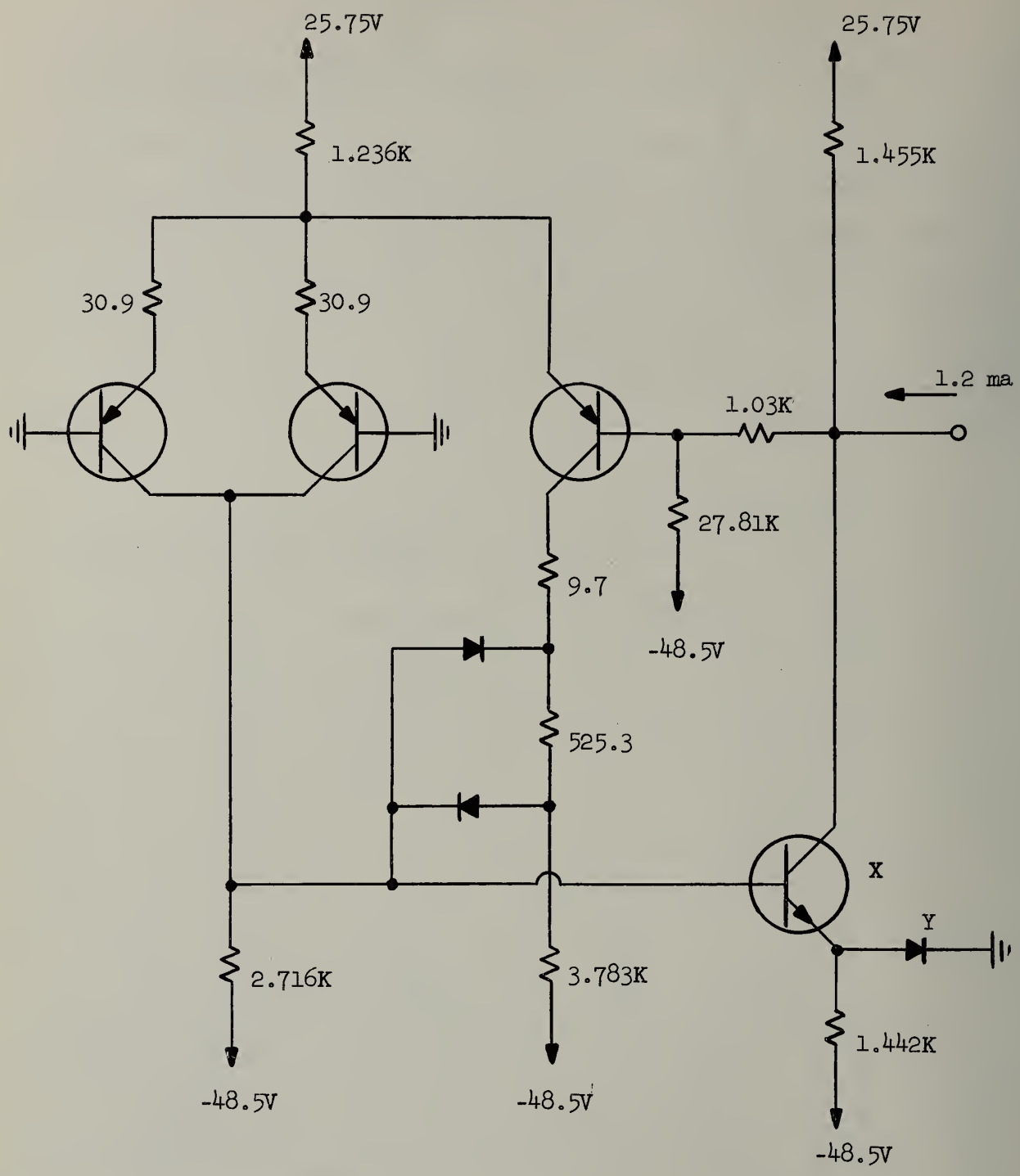

Transistor X is a 2N706 , all others are GF45011

Diode Y is a 1N755A , all others are S577G

Figure 6
Memory Sense Amplifier

C. Configurations of Viscous Transition Regions (Supported in part by the National Science Foundation under Grant G-9503.)

The equations relating the flow around the boundaries of various viscous transition regions have been analyzed in detail for near sonic flows. Their application to the viscous analogs of the three shock and the regular reflection problems leads in each case to a set of eight equations in eight unknowns. Four of these unknowns are angles or functions of angles, while four have the dimensions of length times viscosity. Since this is the only way in which viscosity affects the equations, the solutions for the angles are independent of viscosity. It has been shown that the equations admit a solution corresponding to the non-viscous three or two shock solution with shock curvature zero. Nothing is yet known of the existence of other solutions.

(C. W. Gear)

PART IV

ILLIAC USE AND OPERATION

New Illiac Codes

During the month of February four new routines were added to the Illiac Library.

N16 - 286 Mixed Number Input (DOI or SADOI). This routine will input a mixed number (sign-integer part - decimal point - fraction part). The fractional part of the number is placed in the Q register; the integer part of the number is placed in the A register. The double length AQ register properly represents the number in 79-digit two's complement form.

(John Ehrman)

X17 - 287 Maximum Speed Sexadecimal Input Preparation for Magnetic Drum and/or Williams Memory with Punch Error Detection. This routine will punch out any program from the Williams Memory and/or the drum in sexadecimal form with attached bootstrap input so that on subsequent read-in the program may be ingested with maximum speed. In addition this routine provides features for checking the accuracy of the punched sexadecimal version of the program being output.

(M. E. Suhre, Jr.)

KSL 1.90 - 288 Oblimax Rotation of Factors. This routine transforms a set of factor vectors, g_j, to a new set, h_j, such that the function,

$$K = \frac{\sum \sum h_{ij}^{4}}{(\sum \sum h_{ij}^{2})^2} \qquad \begin{array}{l} i = 1, 2, \ldots v \\ j = 1, 2, \ldots f \end{array}$$

is maximized. The purpose of this transformation is to attempt analytically to rotate the factors such

that they satisfy the subjective criteria for simple structure of L. L. Thurstone. (See Multiple Factor Analysis, pp. 319-410, 1947).

(K. W. Dickman)

J3 - 289 Roots of a Polynomial (SADOI Only). This routine is similar to Routine J2-209, "Roots of a Polynomial", except that conjugate pairs of complex roots are found together, thereby resulting in a saving of time.

(M. E. Suhre, Jr.)

Illiac Usage

During the month of February specifications were presented for 16 new problems. This list does not indicate how the Illiac was used because large amounts of machine time may have been consumed by problems with numbers less than 1613 T. Numbers followed by T are for theses.

1613 T Agricultural Economics. Profit Maximizing Feeding System for Beef Cattle. The problem concerns the choice of an optimum (highest profit) feeding system or linear combination of systems from among 4 systems. The crops to be grown in this operation are assumed to be fixed; however, their disposition is subject to allocation by the linear programming model. The model has 8 restrictions on production, including one for land, one for capital, four for labor, and two definitional restrictions on corn use.

1614 Aviation Psychology Laboratory. Time-on-Target + Frequency Distributions. This program is to combine the functions of both problems numbers 1104 and 1141 with a single read-in of the data to save computer time. It will replace both 1104 and 1141.

Problem number 1104 generated time-on-target scores for several tolerance bandwidths for each of two variables and 1141 generated the frequency distributions of the two variables.

This program will provide both functions with a more flexible choice of tolerance bandwidths and an output format suitable for direct input to

problem number 1580. Problem number 1580 will obtain the mean time-on-target scores and mean relative frequency distributions from the output of several runs of this program.

1615 Psychology. A Comparison of Two Common Personality Inventories. The problem is to compare the factor structure of two common personality inventories at the first- and second-order level and to study the nature of sex differences in personality factors and the effects of such differences on measurement.

The data analysis for the first question requires a factor analysis of split-half factor scores for 13 Guilford and 16 Cattell factors. Second-order factors are also to be computed.

The second question requires separate factor analyses of the data from men and women (N = 214 in all). Also selected items from the various Guilford and Cattell factors (where sex differences are expected) will be factored in an effort to find some of the reasons for sex differences.

1616 T Animal Science. Nutrient Effect on Reproduction. The problem is that in order to accurately determine embryo weights, thyroid, and pituitary weights it is necessary to account for stage of gestation period and variation in live body weight, respectively. The analysis of variance by the method of fitting of constants will enable this to be accomplished.

1617 Physics. Integration for V_k Centers. A Simpson's rule integration is used to evaluate several integrals related to the kinetic energy of the self-trapped hole in an LiF crystal. These computations are a part of a major project whose purpose is to study the nature and binding energy of the ground and first excited state of the V_k center.

The integrals are of the form $\int_0^\infty f(r)\, g_R(r)\, r^n\, dr$ where R is a parameter taking six values and n is an integer running from -2 to 2. The functions f and g_R are presented in tabular form and the program automatically computes the five integrals (for various n), cutting the integration off at an appropriately large upper limit.

1618 T Agricultural Economics. Factor Analysis. This research is concerned with a factor analysis of data taken from the reports of the Bureau of the Census which relate to the characteristics of migrants by specific migration

streams and the characteristics of the population at point of origin and at point of destination. Forty-five variables relative to each of three residence categories, i.e., urban, nonfarm, and farm, relative to each of 4 streams of migration, comprise the bulk of the analysis. Previous models in migration research utilize partial correlations, however, this approach has indicated that the use of partial correlations may not be as useful or as rigorous as factor analysis.

A factor analysis of the characteristics of migrants by major streams should provide a basic insight into the nature of the data relevant to the testing of hypotheses derived from current theory. Those variables which are shown to be of importance but which are demonstrated to have little effect in explanation may, along with the relevant theories, be discarded as being unimportant or, perhaps, even invalid. A number of unanticipated relationships may occur which may broaden the present understanding of the phenomenon of migration as studied by means of census materials.

Incorporating factor analysis as a basic part of the research design provides for a number of applications and, hence, a number of tests of theories relating to migration.

1619 Agricultural Economics. Supply Response of Hog Producers. An attempt will be made to estimate the parameters in behavior relationships explaining the annual variation in the production of hogs in two areas of Illinois. Data are available from 130 producers for a 13 year period.

Fourteen explanatory variables will be used in a regression equation for each year for each area. A time series analysis will be done on the averages for each year.

Linear regressions of the form

$$y = a + \sum_{i=1}^{H} b_i x_i$$

will be fitted by the method of least squares.

1620 T Food Technology. Homogenization Effects on White Sauce. This problem involves the study of a factorial arrangement of a split plot design. One of three kinds of starch were used in making a standard white sauce. The batch was then run through one of three methods of homogenization. Each batch was then split and put through two freezing methods; then each split was resplit and put into one of three storage temperatures.

1621 Bureau of Economics and Business Research. Business Cycle Study. The research involves testing of various relationships among economic variables relevant to business cycles.

The basic hypothetical relationship thus tested serves as a scientific basis for general economic forecasting.

The hypothetical relationships include: consumption function (by major components), inventory cycle, building cycle, investment functions, etc. Essentially these relationships are tested through multiple regression analysis. For instance, consumption function in its highest aggregation may be written as

$$C = \alpha_0 + \alpha_1 Y + \alpha_2 N + \alpha_3 \triangle J.$$

where C = total consumption expenditure in constant dollar in a given period.

Y = total disposable income in constant dollar for the same period.

N = population.

$\triangle J$ = changes in Dow-Jones Industrials.

This simple aggregative hypothesis can be also further disaggregated into durable expenditure function, non-durable expenditure function and service expenditure function, etc. with respective relevant independent variables.

Among the items of consumption automobile expenditure is one of the most important. Thus, this research also leads to the specific study of automobile purchases.

For instance

$$R = \alpha_0 + \alpha_1 Y + \alpha_2 K_{-1} + \alpha_3 M + \alpha_4 P.$$

Where R = new auto registration number in given year.

Y = same as in consumption study.

K_{-1} = total stock of cars at the beginning of the year.

M = terms of credit.

P = average price of the automobiles.

To the extent the auto-equation proves to be significant, one has the means of forecasting the major portion of consumption.

In addition non-consumption sectors, that is government expenditure, investment expenditure, inventory estimating equation, building equations, are separately investigated as in the case of consumption function. Finally the best of each sector equations are integrated to compose the total economic model, which is used for the purpose of short-term forecasts of the U. S. economy.

1622 T Agricultural Economics. Spatial Equilibrium Price Analyses for Livestock-Feed Economy. The inter-regional equilibrium price analyses for livestock-feed economy is to be investigated.

Before optimal solutions for the spatial equilibrium prices in connection with different kinds of meats and feed can be obtained with application of transportation model under the subject of linear programming, knowledge about structural relations in the livestock-feed economy is to be gained. In other words, provided sets of actual observations on all variables in question, parameters or coefficients attached to all variables in a single equation or in a system of simultaneous equations need to be estimated.

For the single-equation estimation method those parameter estimates can be obtained directly with the use of K-16 routine.

For the limited-information estimation method one of the multiple-equation estimation methods, (K-8 routine) is helpful in a part of the entire estimation procedure for partitioning the original matrix into submatrices.

1623 Digital Computer Laboratory. Filter Analysis. The problem consists of analyzing the network whose linear graph and terminal equations are:

Graph:

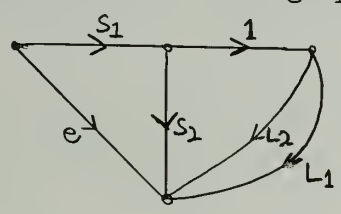

Terminal Equations:

$$\begin{bmatrix} WC_s \frac{d}{dt} & 0 & 0 & 0 & 0 \\ 0 & G_s & 0 & 0 & 0 \\ 0 & 0 & G_1 & 0 & 0 \\ 0 & 0 & 0 & G_L & 0 \\ 0 & 0 & 0 & 0 & WC_L \frac{d}{dt} \end{bmatrix} \begin{bmatrix} V_{s_2} \\ V_{s_1} \\ V_1 \\ V_{L_1} \\ V_{L_2} \end{bmatrix} = \begin{bmatrix} i_{s_2} \\ i_{s_1} \\ i_1 \\ i_{L_1} \\ i_{L_2} \end{bmatrix}$$

$$e(t) = \sin t$$

This amounts to solving the system of equations:

$$y'_0 = 2a_{1L}\, y_1 - (a_{1L} + a_{LL})\, y_0$$

$$y'_1 = a_{1s}\,(1/2\, y_0 - y_1) + a_{ss}\,(y_2 - y_1) \quad \text{where } a_{ss} = \begin{cases} (W\, R_s\, C_s)^{-1} & \text{for } y_2 - y_1 \geq 0 \\ 0 & \text{for } y_2 - y_1 < 0 \end{cases}$$

$y'_2 = y_3$

$y'_3 = -y_2$

$y'_4 = \frac{1}{2\pi}$

1624 Electrical Engineering. Ground State of H^- Ion. The ground state of a H^- ion is to be calculated by the method of variations by assuming a trial wave function containing 2 parameters a, b. A function F(a,b) is obtained which when minimized with respect to a and b yields an approximation to the ground energy level. Routine H3 will be used.

1625 T Mechanical Engineering. Simulated Sampling. A study will be made to test by means of simulated sampling on the Illiac the reliability and relative superiority of eight different methods used to determine the required number of observations or samples, N', necessary to make a selected statistical inference of a population mean value. The process will consist of taking preliminary random samples of n and applying certain combinations of statistics from that sample (sample mean, mid-range, standard deviation, range, subgroup range or moving range) in the determination of the ultimate sample, N', required. N' random samples will then be selected and mean values calculated.

Phase I of this problem (Illiac problem number 1653T) dealt with sampling from a normal universe. This phase (Phase II) will deal with a non-normal population (highly skewed and leptokurtic), typical of the type often encountered in the measurement of task times in manufacturing operations. Part 1 of Phase II will deal with small preliminary samples while Part 2 will require large preliminary samples.

The methods used here to determine N' will be the same as were used for problem 1653 T. The object is to test the reliability of methods based on normal assumptions when applied to non-normal populations.

1626 Coordinated Science Laboratory. Equilibrium Constitution of Ionized Air. The equilibrium values of seventeen of the most common constituents of heavily heated air will be determined by integrating the seventeen first order, nonlinear differential equations which describe their production and decay.

1627 Psychology. The Anxiety Differential and Failure Anxiety. The problem involves cross-validation of a new measuring technique, the Anxiety Differential. It is necessary to obtain intercorrelations between test items, and also to compare the results from an experimental group with a control group. Standard library routines will be utilized.

1628 Psychology, Emory University. Religious Activity and Need. The proposed research is a pilot study concerned with the factor analytic analysis of data which are intended to explore some of the relations between participation in religious activities and psychological needs.

Table I shows the distribution of Illiac machine time for the month of February.

TABLE I

	Hrs:Min	
Scheduled Maintenance	66:33	
Unscheduled Maintenance	38:00	
Drum Engineering	10:21	
R.A.R.	:59	
Leapfrog	8:12	
Wasted	:00	
Library Development	5:15	
Classes	:24	
Demonstrations	3:14	
		132:48

Use by Departments

Agricultural Economics	3:11
Agronomy	8:11
Animal Science	3:28
Bureau of Economics and Business Research	:03
Bureau of Educational Research	4:11
Chemistry (Nonr 1834(13))	1:39
Chemistry (NSF G-7336)	:02
Chemistry	66:51
Conservation	3:30
Coordinated Science Laboratory	64:28
Digital Computer Lab.(AEC AT(11-1)415)	24:01
Digital Computer Lab.(NSF G-9503)	7:17
Digital Computer Lab.(Nonr 1834(27))	5:53
Digital Computer Laboratory	8:20
Economics (NSF G-7056)	3:26
Economics	:10
Education (IREC)	5:10
Education	2:04

(continued)

TABLE I
(cont'd.)

Use by Departments

	Hrs:Min	
Electrical Engineering (NSF G-7421)	3:43	
Electrical Engineering (Nonr 1834(22))	1:49	
Electrical Engineering (NASA-NSG-24-59)	1:51	
Electrical Engineering (AF 33(616)6079)	:13	
Electrical Engineering	7:36	
Food Technology	12:03	
Geology	:32	
Liberal Arts and Science	2:16	
Marketing	:04	
Mathematics	5:00	
Mechanical Engineering	5:09	
Mining and Metallurgical Eng. (TRUS AF6770)	:24	
Mining and Metallurgical Engineering	:11	
Music	:13	
Physics (Nonr 1834(12))	:13	
Physics	16:33	
Psychology (SAE 8383)	23:21	
Psychology (M-1733)	11:09	
Psychology (Nonr 1834(11))	:09	
Psychology	42:06	
State Natural History Survey	:12	
State Water Survey (DA-36-039-SC75055)	8:22	
State Water Survey	2:06	
Structural Research (IHR-46)	:05	
Structural Research (Nonr 1834(03))	:08	
Structural Research (NSF G-6572)	3:43	
Structural Research	40:35	
Student Counseling	3:58	
Theo. and Appl. Mech. (DA-11-070-508 ORD 593)	1:24	
Theo. and Appl. Mech. (AF(616)6643)	:29	
Theo. and Appl. Mech. (NOBS 72069)	:22	
Veterinary Medicine (MD 728)	:48	
Purdue University	1:05	
		409:57
		542:45

Error Frequency and Analysis

The machine is normally used for "engineering" and maintenance between 7 a.m. and 10:30 a.m. Since the periods between 7 a.m. and 10:30 a.m. together with certain irregular periods, such as Saturdays and Sundays, are devoted to a heterogeneous group of engineering, maintenance, and laboratory functions, it is more instructive, from an error standpoint to look at the

periods between 10:30 a.m. and 7 a.m. of the next day in order to make an observation of the error frequency in the machine. This is the actual period when the machine is designated for use, although certain engineering procedures frequently require the scheduling of extra maintenance time. With this in mind, a summary table has been prepared using the period between 10:30 a.m. and 7 a.m. of the next day. This table lists the running time when the machine was operating, the amount of time devoted to routine engineering, the amount of time devoted to repairs because of breakdowns, and a number of failures while the machine was listed as running. Each failure was considered to have terminated a running period and was followed by a repair period in preparing this table. Since the leapfrog code is our most significant machine test, the length of time which it has been used on the machine is listed separately, together with the number of errors associated with that particular code. This information for the month is presented in Table II.

It is important to notice that, except during scheduled engineering periods, any interruption of machine time that was not planned is considered a failure in this table. In rare cases, where the failure is not known until a later time, it is possible that no repair period is associated with the failure. This over-all system has been adopted because it makes it possible for a machine user to estimate directly the probability that the machine will be "running" any instant of time and the probability of a failure during any given interval of running time.

Table III presents a summary of errors or interruptions for February.

TABLE III

Memory	1
Input-Output	1
Punch	6
Reader	1
Drum	4
Arithmetic	2
Camera	3
Filament voltages too high	1
Runover of A.M. Eng. into production	8
Unknown	4
Total	31

TABLE II

DATE	RUNNING OK TIME	REPAIR TIME	SCHEDULED ENGINEERING	INTERRUPTIONS OR FAILURES STOPPING OK TIME	TYPES OF INTERRUPTIONS OR FAILURES CAUSING REPAIR TIME	WASTED	LEAPFROG	FAILURES STOPPING LEAPFROG
2/1/60	21:35	:00	2:25	0		:00	:20	0
2/2/60	20:13	:16	3:31	1	(1) Unknown	:00	:00	0
2/3/60	20:53	:00	3:07	0		:00	:20	0
2/4/60	20:29	:01	3:30	1	(1) Camera erratic	:00	:00	0
2/5/60	21:31	:00	2:29	0		:00	:00	0
2/8/60	17:32	2:54	3:34	3	(1) Input-output error (2-3) Camera	:00	:20	0
2/9/60	20:11	1:24	2:25	2	(1) Filament voltages too high (2) Memory position 9-37 at fault	:00	:20	0
2/10/60	20:07	1:23	2:30	3	(1) Morning engineering ran over into production time (2) Unknown (3) Drum failure	:00	:44	0
2/11/60	21:09	:21	2:30	1	(1) Runover of morning eng. into prod.	:00	:39	0
2/12/60	9:08	12:22	2:30	3	(1) Runover of morning eng. into prod. (2) Decoding chassis tubes bad (3) Drum failure	:00	:20	0
2/15/60	20:05	1:25	2:30	1	(1) Runover of morning eng. into prod.	:00	:19	0
2/16/60	20:58	:32	2:30	2	(1) Runover of morning eng. into prod. (2) Reader "B" error	:00	:20	0
2/17/60	18:18	2:35	3:07	2	(1) Complement gate tubes bad (2) Punch "1" error	:00	:54	0
2/18/60	20:20	:21	3:19	1	(1) Punch "1" error	:00	:00	0
2/19/60	15:15	6:15	2:30	4	(1) Runover from morning engineering (2-3) Punch "1" error (4) Drum failure	:00	:23	0
2/22/60	18:24	2:08	3:28	2	(1) Runover from morning engineering (2) Punch "1" error	:00	:29	0
2/23/60	21:20	:15	2:25	1	(1) Unknown	:00	:21	0

TABLE II (Cont'd.)

DATE	RUNNING OK TIME	REPAIR TIME	SCHEDULED ENGINEERING	INTERRUPTIONS OR FAILURES STOPPING OK TIME	TYPES OF INTERRUPTIONS OR FAILURES CAUSING REPAIR TIME	WASTED	LEAPFROG	FAILURES STOPPING LEAPFROG
2/24/60	21:15	:00	2:45	0		:00	:36	0
2/25/60	19:25	2:05	2:30	1	(1) Drum failure	:00	:20	0
2/26/60	20:40	:50	2:30	2	(1) Runover from morning engineering (2) Unknown	:00	:20	0
2/29/60	20:50	:23	2:47	1	(1) Punch "1" error	:00	:00	0
TOTALS	409:38	35:30	58:52	31		:00	7:05	0

PART V

IBM 650 USE AND OPERATION

IBM 650 Usage

During the month of February specifications were presented for 12 new problems. This list does not indicate how the IBM 650 was used because large amounts of machine time may have been consumed by problems with numbers less than 81'T. Numbers followed by T are for theses.

81' T Chemistry. Structural Determination of $BaS_2O_3 \cdot H_2O$. The program to be employed is a supplement to the program used under the title 63'T. 63'T employs this basic equation $P(XYZ) = \frac{8}{V_e} \left\{ \sum_0^\infty \sum_0^\infty \sum_0^\infty \begin{matrix} h+k = 2n, \ell = 2n \\ F(hk\ell) \end{matrix} \cdot \right.$

$\cos 2\pi h x \cos 2\pi k y \cos 2\pi \ell z - \sum_0^\infty \sum_0^\infty \sum_0^\infty \begin{matrix} h+k = 2n+1, \ell = 2n \\ F(hk\ell) \end{matrix} \cdot$

$\left. \sin 2\pi h x \cos 2\pi k y \sin 2\pi \ell z \right\}$. P is therefore calculated twice depending upon the type of reflections present and the answers are put on a grid of about 1800 points, to give a contour map of electron density (P). This supplementary program will calculate the sums and differences of these summations and will save at least 18,000 calculations of a routine nature.

82' Civil Engineering. Linear Programming. This program pertains to a linear programming model employing the simplex method. It is to be applied to optimization studies for decision making in construction engineering.

The program is an application of matrix algebra to solve a set of linear equations which consists of more unknowns than there are equations. The solution of this set that is sought is that set of variables which maximizes (or minimizes) an additional linear function of the same unknowns.

83' Chemistry. X-ray Diffraction Data Analysis. This program is designed to find what compounds are contained in a sample of unknown material. The X-ray Diffraction Data (i.e. "d-spacings") for some 3,000 compounds will be stored on magnetic tape. The user will supply the "d-spacings" of his unknown sample and a tape sorting program will produce a list of compounds which may constitute the unknown, together with a count of the number of the first 19 lines of each of these compounds which coincide with the d-spacings as provided by the

user. Output will be on the 407. The user must also supply the possible experimental error existing in the unknown's d-spacings. Provision is made for periodically updating the list of about 3,000 compounds to provide corrections and additions as they become available.

84' T Agronomy. A Comparison of Breeding Methods for Red Clover for Persistence. The within-family variances will be calculated for 19 observational characteristics. This research problem is concerned with comparing persistence of different families of red clover plants.

85' T Chemistry. Evaluation of Many-Centered Integrals. The research problem is concerned with developing a variational method for calculating spin-spin interactions in molecules. In the actual calculation of these interactions a number of many-centered integrals have to be evaluated. There are several programs available for evaluating such integrals, using Simpson's Rule. In order to test the applicability of using these programs for this problem it is necessary to evaluate several sample integrals.

86' Agronomy. Cultural and Management Practices with Agronomic Crops. This problem involves the study of dwarf corn row spacing and population at three locations. Yield, grain per plant, lodging, ear height and tassel height will all be analyzed to determine the effect of row spacing and population. The experiments were in a split plot design and analysis of variance will be used to analyze the above mentioned characters.

87' Horticulture. Temperature Analysis of Illinois Weather Records. Ten Illinois weather stations will be analyzed for consecutive sequences or runs of days with minimum or maximum temperature below or above certain specified levels. These sequences are to be analyzed by the week in which the sequences originated.

The raw data for each station includes daily weather observations over a 54 year period.

88' Education. Reading Scientific Material. Factors associated with the ability of sixth-grade children to read science material for each of two predetermined purposes will be investigated. The problem is to discover re-

lationships between reading speeds and comprehensions when reading science material in order to comprehend specific directions and reading science materials to understand cause-and-effect relationships. Variables are age, nonverbal intelligence, general reading abilities, ability to read science materials and academic achievement in science. Total sample size is 50. All variables will be correlated against science reading abilities with the two specified purposes. In addition, certain of the variables will be correlated with each other.

89' Graduate College. Electronic Processing of Graduate College Grades and Records. The 650 will be utilized to process electronically the recording of courses, grades, computation of grade averages, results of language examinations, preliminary examinations, thesis research and final examination results in the Graduate College. In addition, certain historical and statistical information such as existance of deferred grades, undergraduate institution and average, graduate institution and average, appointment, percent time of appointment, accumulative semesters of fellowship and possibly other information will be recorded in such a way that this information may be made available for individual graduate students, and the Graduate College collectively. This information will be stored on magnetic tape and parts will also appear on IBM cards. Card sorting techniques and tape sorting techniques can be developed in the future to collect data in a number of ways. The 407 will be employed to print out the course information quickly at the end of each semester.

90' T Physics. Quantum Mechanical Variation Principle. The problem involves the finding of the ionization potential of the H^- ion by means of the variational method of quantum mechanics. The trial wave function is:

$$\Psi(r_1\ r_2) = C\left\{e^{(-a/a_0)r_1\ -(b/a_0)r_2} + e^{(-b/a_0)r_1\ -(a/a_0)r_2}\right\}$$

where a, b are the variational parameters.

The lowest energy state of the ion is given by the minimum value of the integral:

$$F(a,b) = \frac{\int d^3x_1\ d^3x_2\ \Psi(r_1r_2)\ H\ \Psi(r_1r_2)}{\int d^3x_1\ d^3x_2\ \Psi(r_1r_2)\ \Psi(r_1r_2)}$$

Where H is the Hamiltonian of the system:

$$\text{e.g.} \qquad H = -\frac{h^2}{2m}\nabla_1^{\,2} - \frac{e^2}{r_1} - \frac{h^2}{2m}\nabla_2^{\,2} - \frac{e^2}{r_2} + \frac{e^2}{r_{12}} \quad .$$

After evaluating the integrals analytically it is found that:

$$F(a,b) = F(x) = -\frac{P_2^{\,2}(x)}{4P_3(x)\,P_1(x)}$$

where:

$$P_1(x) = 64x^4 + 1/2(x^2 + 1)\,(x + 1)^6$$

$$P_2(x) = 44x^3\,(x + 1) + (2x + 3x^2 + 2x^3)\,(x + 1)^3 + (x^3 + 1)\,(x + 1)^4$$

$$P_3(x) = 64x^3 + (x + 1)^6$$

and

$$x = b/a \ .$$

The IBM 650 will be used to find the minimum value of F(x) and the value of x for which this occurs. This will be done by calculating about 200 values of F(x) for x ranging from 0 to 5.

91' T Civil Engineering. Analysis of Tapered Steel Rigid Frames. This program provides the moment influence coefficients (by determining horizontal thrust) for unit horizontal and vertical loads on tapered, haunched rigid frames fabricated from standard split WF steel sections. The basic method of analysis is by "virtual work". A complete, general program should provide for eleven variables (excellent for use of the digital computer since basically a numerical integration procedure).

The basic "virtual work" equation for the thrust reaction of a frame is: (constant modulus of elasticity)

$$H_i = \frac{\int \frac{M_{si}\ y\ \ ds}{I}}{\int \frac{y^2\ \ ds}{I}}$$

where M_{si} is the static moment of a segment when one support is released to make the structure "determinate". "y" is the y-coordinate to that segment, ds is the segment length and I the moment of inertia.

92' Physics. Probability of Scatter. In the study of probability of the scattering angles of a particle from an electron cloud, it is found that the solution will take on the form of the solution of a linear system. This system of equations may be represented by the following:

$$a_{k_1} = \theta\,(2 - |k - k_1|) + \lambda \sum_{k_2} \left[\frac{\theta(2 - |k_1 - k_2|)}{(k^2 - k_2{}^2)^2 + \eta^2} \left\{ (k-k_2)\, a_{k_2} + \eta b_{k_2} \right\} \right]$$

$$b_{k_1} = \lambda \sum_{k_2} \left[\frac{\theta(2 - |k_1 - k_2|)}{(k^2 - k_2{}^2)^2 + \eta^2} \left\{ (k - k_2)\, b_{k_2} - \eta a_{k_2} \right\} \right]$$

where

$$\theta = \begin{cases} 1 & x \geq 0 \\ 0 & x < 0 \end{cases} \qquad \lambda,\ \eta,\ k \text{ are fixed parameters} \qquad \pm L < \begin{matrix} k_1 \\ k_2 \end{matrix} < \pm M$$

The program solves this in two steps. First the parameters are read in; then the coefficients for the resulting matrix are generated. Finally the matrix inversion routine is used for these coefficients and the results printed using the matrix punch routine.

Table I' shows the distribution of the IBM 650 machine time for the month of February.

TABLE I'

		Hrs:Min	
Regular Maintenance		20:16	
Unscheduled Maintenance		8:04	
Library Development - DCL		5:13	
Log Summation		:51	
Classes		5:25	
Civil Engineering 297	4:47		
Civil Engineering 391	:38		
Wasted		35:39	
			75:28

(continued)

TABLE I'
(cont'd.)

Use by Departments

		Hrs:Min		
Agronomy		9:44		
Chemistry		7:14		
Digital Computer Laboratory		2:51		
Physics		:25		
Statistical Service Unit		84:27		
Bur. of Ed. Research	:45			
Bur. of Insti. Research	2:39			
Business Office	34:42			
DHIA	23:11			
Education	8:10			
Horticulture	1:16			
Marketing	:45			
Psychology	10:16			
Student Coun. Service	2:43			
Structural Research		9:14		
Theoretical and Applied Mechanics		1:22		
			115:17	
				190:45

Error Frequency and Analysis

The IBM 650 is normally on from 8 a.m. to 5 p.m. The machine is used for preventive maintenance from 8 a.m. to 12 noon on Mondays.

Table II' gives the daily breakdown of machine time with respect to wastage and unscheduled maintenance.

Table III' presents a summary of errors for February.

TABLE III'

Tape Units		3
Read error	1	
Would not rewind	1	
Would not recognize load point	1	
533		2
Punch	1	
Read	1	
Fuse		4
Lost Bits		5
Accumulator	3	
Program register	1	
Distributor	1	
Floating Point		1
	Total	15

TABLE II'

DATE	RUNNING OK TIME	SCHEDULED ENGINEERING	REPAIR TIME	WASTED	FAILURES STOPPING OK TIME	TYPES OF FAILURES CAUSING REPAIR TIME
2/1/60	4:39	3:56		:25	0	
2/2/60	7:40			1:20	0	
2/3/60	5:48			3:12	0	
2/4/60	8:55			:30	3	(1) Read error on Tape Unit 1 (2) Accumulator (3) Tape unit 2 would not rewind.
2/5/60	9:18		:10	:12	1	(1) Loose screw in 533
2/8/60	4:38	3:58		:36	0	
2/9/60	5:38			3:22	0	
2/10/60	5:48			3:12	0	
2/11/60	7:04			1:56	1	(1) Program register dropped a 9 bit in pos. 10
2/12/60	4:47		2:09	2:09	1	(1) Non-indicating fuse blew in the 650
2/15/60	4:35	4:07		:21	0	
2/16/60	6:32			2:28	0	
2/17/60	4:13			4:47	0	
2/18/60	7:17		1:21	:22	3	(1) Fuse in 652 (2) Tape unit 3 not recognizing load point (3) Bits lost from distributor and accumulator
2/19/60	2:15		2:55	3:50	2	(1) Fuse in 652 (2) Quinary bit lost
2/22/60	2:21	4:26	1:04	1:09	1	(1) Fuse light on 650 came on but no fuse blown
2/23/60	7:34		:25	1:01	2	(1) Distributor lost a 9 bit in pos. 2 (2) Card feed trouble in 533
2/24/60	6:34			2:26	0	
2/25/60	8:27			:53	0	
2/26/60	7:32			1:28	1	(1) Floating point error
2/29/60	5:11	3:49		:00	0	
TOTALS	126:46	20:16	8:04	35:39	15	

PART VI

GENERAL LABORATORY INFORMATION

Seminars

"A New Device-System Concept for Digital Computer Application", by Mr. Hewitt Crane, Stanford University, February 8, 1960.

"Some Thoughts on High Speed Storage and Logic", by Dr. L. P. Morgan, The Mullard Radio Valve Co. Ltd., Surrey, England, February 22, 1960.

"Emitter Follower Stability Problems", by Mr. Henry Guckel, Digital Computer Laboratory, University of Illinois, February 29, 1960.

Personnel

The number of people associated with the Laboratory in various capacities is given in the following table:

	Full-time	Part-time	Full-time Equivalent
Faculty	9	2	10.5
Research Associates	1	-	1.0
Graduate Research Assistants	5	35	22.4
Graduate Fellows	2	-	2.0
Administrative and Clerical	5	-	5.0
Other Nonacademic Employees	27	3	28.5
Totals	49	40	69.4

The Laboratory Advisory Committee consists of Professors H. C. Brearley, L. D. Fosdick, D. B. Gillies, G. A. Metze, D. E. Muller, T. A. Murrell, W. J. Poppelbaum, J. E. Robertson, J. N. Snyder and A. H. Taub.

UNIVERSITY OF ILLINOIS
GRADUATE COLLEGE
DIGITAL COMPUTER LABORATORY

TECHNICAL PROGRESS REPORT

PART I - HIGH-SPEED COMPUTER PROGRAM
PART II - CIRCUIT RESEARCH PROGRAM
PART III - MATHEMATICAL METHODS
PART IV - SWITCHING CIRCUIT THEORY
PART V - ILLIAC USE AND OPERATION
PART VI - IBM 650 USE AND OPERATION
PART VII - GENERAL LABORATORY INFORMATION

March, 1960

PART I

HIGH-SPEED COMPUTER PROGRAM

This work is supported in part by Contract No. AT(11-1)415 of the Atomic Energy Commission and in part by the University of Illinois. Contract No. AT(11-1)415 is supported jointly by the Atomic Energy Commission and the Office of Naval Research.

A. Logical Design

1. Pseudo-Adder Design

Tolerance analysis of the standard base 4 pseudo-adder is being completed (using the approach outlined in February's report). For the input conditions analyzed so far, the output of the adder-selector cascade of non-restoring logic does not degenerate to less than .9 volt in magnitude, based on the currently available diode and transistor data, and assuming selector driver outputs to be < -2 volts when off.

Provided logical relations between signals are maintained, collector dissipation ratings cannot be exceeded in the adder, since no transistor drives two internal wires which can be positive simultaneously.

(J. A. Resh and R. R. Shively)

2. Division

Most of March was devoted to writing a report on the description of the division operations in the main arithmetic unit and the design of the associated logic. The portion of the report which gives a step-by-step description of the data flow during ordinary floating point and integer division has been completed. The logical design section is still being written.

From the point of view of arithmetic control, some thought was also given to defining a set of micro-operations which will consist of all the basic operations performed in the main arithmetic unit. The major operations such as additions, shifts, multiplication and division will then be constructed as sequences of these micro-operations.

(J. O. Penhollow)

B. Test Unit 2

A completely new speed-independent control for test unit #2 has been designed, built and tested. Its new features are the following; (a) the Robertson driver system has been included in the logical design; (b) due to the stability of the new driver system, the control can use replyback signals and operate as a truly speed-independent control; and (c) the UP and DOWN gates are mutually exclusive rather than push-pull as in earlier controls. Test results are very gratifying since shifting can be accomplished in about 140 musec. for a 16-bit register. This result is very encouraging since it was obtained while using two separate drivers, each feeding 8-bits. Heretofore satisfactory shifting could be obtained only when all the bits were fed from the same driver. This value of average shift time was obtained using twisted pair feed lines between control and driver chassis where each line is fed from a cable driving amplifier. These cable drivers are capable of feeding into coaxial cable, however, it is anticipated that use of coax would lengthen the operating time.

The accompanying drawing shows the logical diagram of an Eccles-Jordan Flipflop with its two OR circuits and two NOT elements. With the new driver system a given control signal experiences three polarity inversions (the equivalent of a NOT) as it passes from control through a cable driver, through the driver amplifier and then another cable driver and back to control as a replyback signal. Thus by crosscoupling the UP and DOWN replyback signals to OR circuits in the control, the entire driver system could become an Eccles-Jordan Flipflop. This would have two primary advantages; (a) one characteristic of the Eccles Jordan is that regardless of the input, only one of the outputs can be a ONE, therefore both UP and DOWN gates could not be on at the same time, and (b) it seems reasonable to assume that if the driver system becomes an integral portion of the control logic a shorter operating time might be possible. As a result of these considerations an attempt is being made to design a control using only Eccles Jordan memory elements. The motivation for such action is to compare both the speed of operation and the cost of an Eccles Jordan control with these of the "F" and "C" element control mentioned above.

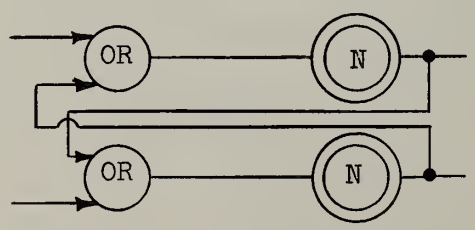

(R. E. Swartwout)

C. Circuit Design

During March the F-element was redesigned to provide more power output and less collector dissipation in the gating transistors. The logical diodes, originally located in the collector circuits of the F-elements, were moved to the base circuit of the "0" side output. This enabled the collector of any conducting transistor in the gating or input circuit to be at -5 volts, thus reducing collector dissipation to permissible design range.

It was discovered that the original NOT circuit and LEVEL RESTORER did not give a sufficiently positive output in the worst tolerance condition. The circuit has been redesigned.

(N. H. Johnson)

D. Order Code

A detailed list was made of the steps required to carry out each instruction involving the main arithmetic unit. As a result of this, the instructions exclusive or, fast integer multiply, and determine sign of difference, were removed to simplify the arithmetic unit and control. The gating path from R to M is now controlled by two gating signals: gate zeros from R, which sets M to the AND of R and M, and gate ones from R, which sets M to the OR of R and M. When both gates are opened, R is gated to M.

(J. E. Robertson, D. B. Gillies, R. R. Shively and J. O. Penhollow)

Program Library

Further studies were made in preparation for writing the program input routine. The print-out of a program tape will have one instruction, or one word per line. The first character on a line is either a tab or an outside symbolic address followed by a tab. When an instruction is tagged with a symbolic address, this refers to the word and position of the first control group of that instruction. Provision will be made for relative symbolic addresses so that the address part of an instruction can also be referred to. + · n means n control groups after the preceding symbolic address, while + n means n words. Initially a mnemonic code will be used to refer to the function (1 to 4 letters) followed by a tab signifying the beginning of the address part of the instruction. Later, when the binary equivalent of each function is known, the option of 2 digit functions followed by a tab will also be provided. The address defines the B, C and, if

necessary, N part of the instruction, and, if a numerical constant is written out, will also cause the input routine to compute a constant word and assign a memory location to it. Floating point numbers are identified in the address position by beginning with + or - and having a decimal point somewhere. A modified address begins with a decimal integer, (the number of the modifier), followed by +, followed by any further address. A fast register is written Rn where n is the number of the register.

(M. A. Fisherkeller, R. H. Flenner, J. Flenner and D. B. Gillies

E. Core Storage Unit

During March, it was decided to construct a skeletal memory of 64 words, 3 bits per word. The purpose of this memory model is, principally, to develop and test the physical layout of the full-scale memory. More performance data for certain circuits which have not yet seen extensive operation will also result. The general layout for this model has been completed and the detailed planning is well under way. It is expected that a large part of the effort devoted to detailed layout of several chassis types will be directly utilized in the final memory.

(B. E. Briley, J. L. Muerle and S. R. Ray)

F. Input-Output and Auxiliary Storage

The Ampex FR300 Tape Transport has continued to exhibit pack slip. Ampex has proposed to eliminate the slip by adding arms to our machine which will press on the tape as it winds on the reel, forcing out the trapped air, and producing a tighter wind. They also propose to up-date our machine by installing certain other modifications, including new vacuum chambers, a new vacuum regulator, and certain reel servo components. The changes will be made in early April.

(H. C. Brearley)

Transverse drop-out tests were continued. More encouraging results were obtained on a reel of 3M-189 sandwich tape. At a density of 466 bits/in. and a tape speed of 150 ips, single channel drop-outs from 4 channels were about 4 per full reel of tape (3600'). Multiple channel drop-outs occurred only occasionally, with more than half of the passes exhibiting no multiple drop-outs at all.

(C. N. Liu and T. C. Piper)

A new clock pulse (square-wave) generator was designed for -50v. operation; it has not yet been tested nor have final drawings been made. A 50v. flipflop for use in the output circuit of this generator is 75% designed.

(R. L. Cummins)

Considerable time was spent during the month of March in attempting to justify (using Illiac) the J-element. The design was found to be incompatible with the new diode design specs. A new J-element is now in the process of justification.

The equipment which will be used to keep records of FR300 operation times has been brought up to date and will be installed on the machine in the immediate future.

(L. J. Peek, Jr.)

PART II

CIRCUIT RESEARCH PROGRAM

(Supported in part by the Office of Naval Research under Contract Nonr-1834(15).)

1. Summary of the Work in March

Flow-gating (H. Guckel), tunnel-diodes (T. Kunihiro) and tolerance calculations on the AND and OR circuits of the non-restoring type (J. Karge and J. Baur) were on the program. The tolerance calculations have been terminated.

2. Flow-Gating

A slightly different flow-gating system was considered. There are several reasons for this step:

1. It is felt that a back-up program is needed in case delivery difficulties arise in connection with the U of I 604. This system should use the standard GF45011 transistor.
2. The speed of the system can be improved if driver-diode-base connections can be used.
3. If the bases are clamped by diodes, base currents will not hinder the performance.

The topology of the flipflop is shown in Figure 1.

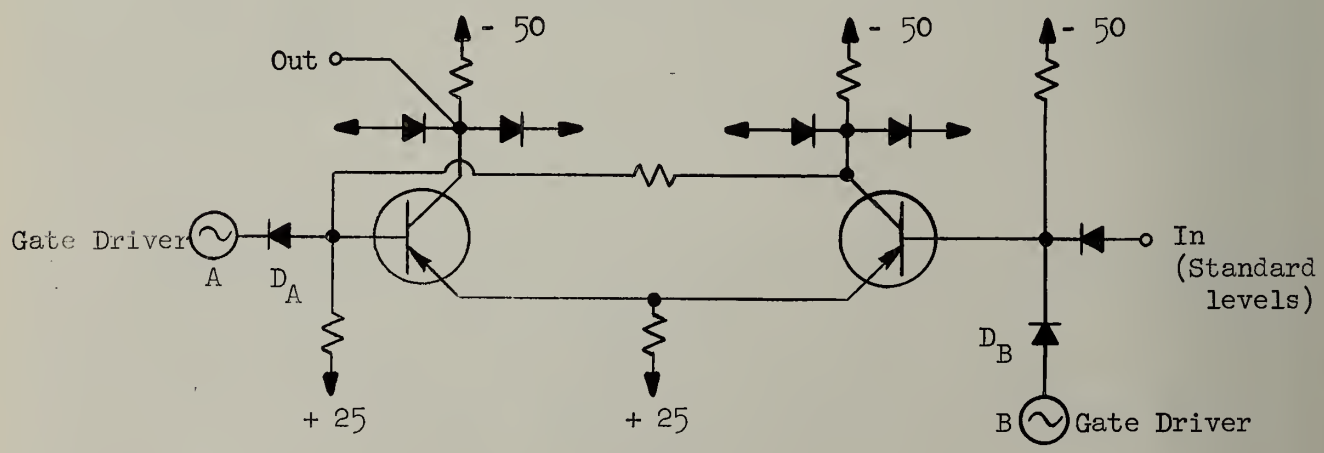

Figure 1

Asymmetric Flow-Gating Flipflop

The design was made possible by the realization that during the gate-in period the feedback loop of the circuit need not be closed. As can be seen from Figure 1 two gate drivers are used, but they are identical AC-wise and show only a DC voltage difference (of about 4v). The flipflop operates as follows: when both drivers are down, diode D_B decouples the driver and D_A clamps the left base to the driver voltage (actually ground); standard levels can now be used to set the circuit. As soon as the drivers go up, D_A decouples and "liberates" the feedback loop while D_B clamps the right base at a constant voltage level above that of the highest possible input voltage. The results seem to be fairly good. An experimental model showed read in times of well below 50 mμsec.

The 14 bit test unit of the older flow-gating flipflop (or flowflop) type was received and tested statically. All flowflops worked and are now undergoing dynamic tests. The level shifter in this flipflop should be reworked. This is necessitated by the large tolerance margins on the 1N749 Zener Diode.

The output circuit for the flipflop is currently under investigation. It is apparent from performance data that emitter followers should be used as buffers. The use of a few feet of cable lengthens the setting time of the flipflop due to high time constants in the collector.

3. Tunnel-Diode Circuitry

Using the basic philosophy described in last month's report improvements were made in the tolerance conditions by using tunnel-diodes in pairs (so-called "twins"). Figures 2, 3 and 4 show a majority circuit, a minority circuit and a flipflop using twins. Note that the minority circuit is essentially the same, except that the twin is used as an inverter.

The switching performance of these circuits was analyzed and it turned out that

$$t_{op} = T \frac{V_{out}}{V_{in}} + \frac{T_s}{G_0}$$

where

$$T = RC, \quad T_s = \frac{L_s}{R}, \quad \text{and } G_0 = \frac{R}{|R-R_L|} \cdot$$

L_s = leakage inductance

RC = RC product of tunnel-diodes

R_L = load resistance

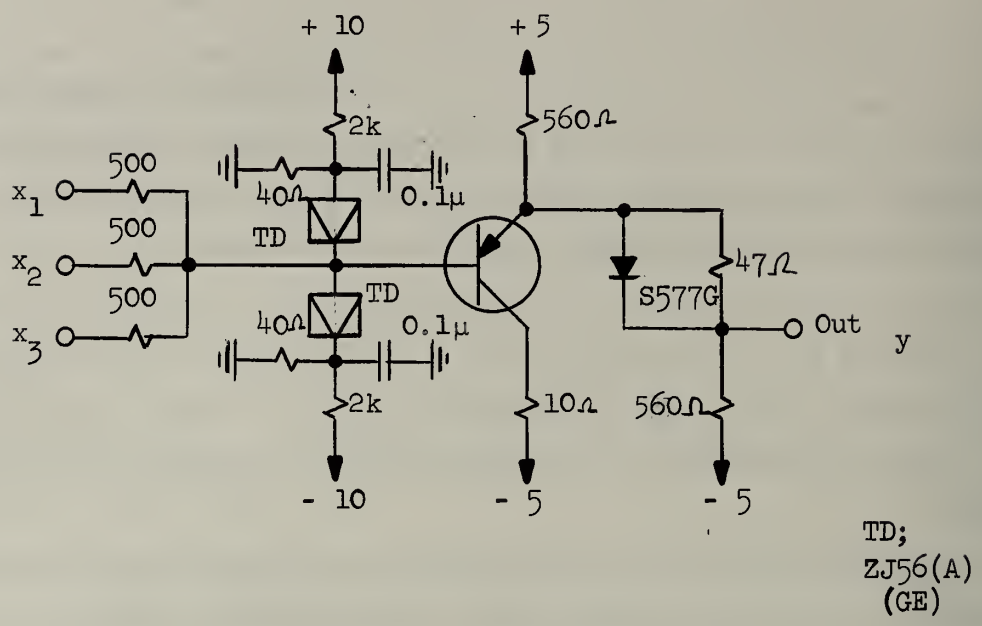

Figure 2

Majority Twin EF Circuit

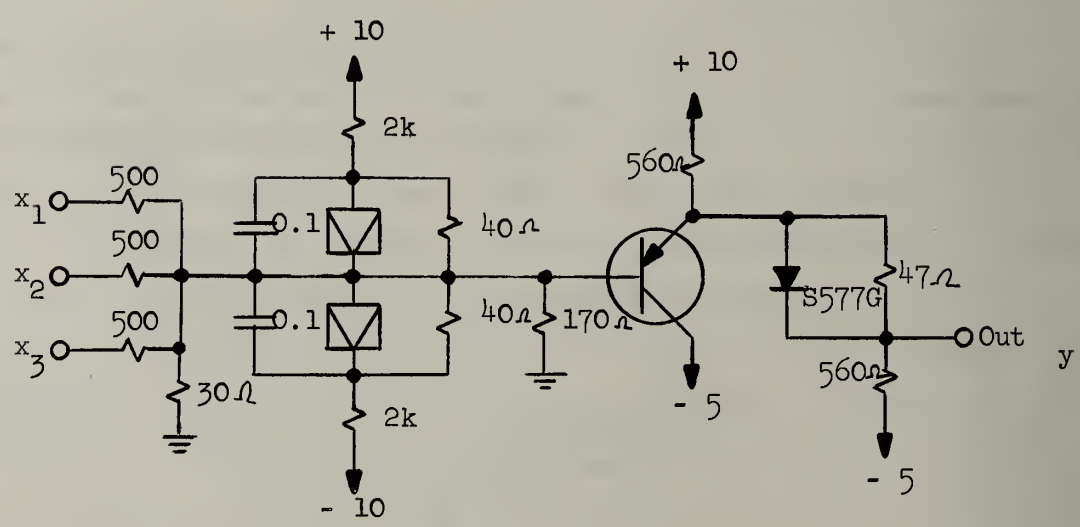

Figure 3

Minority Twin EF Circuit

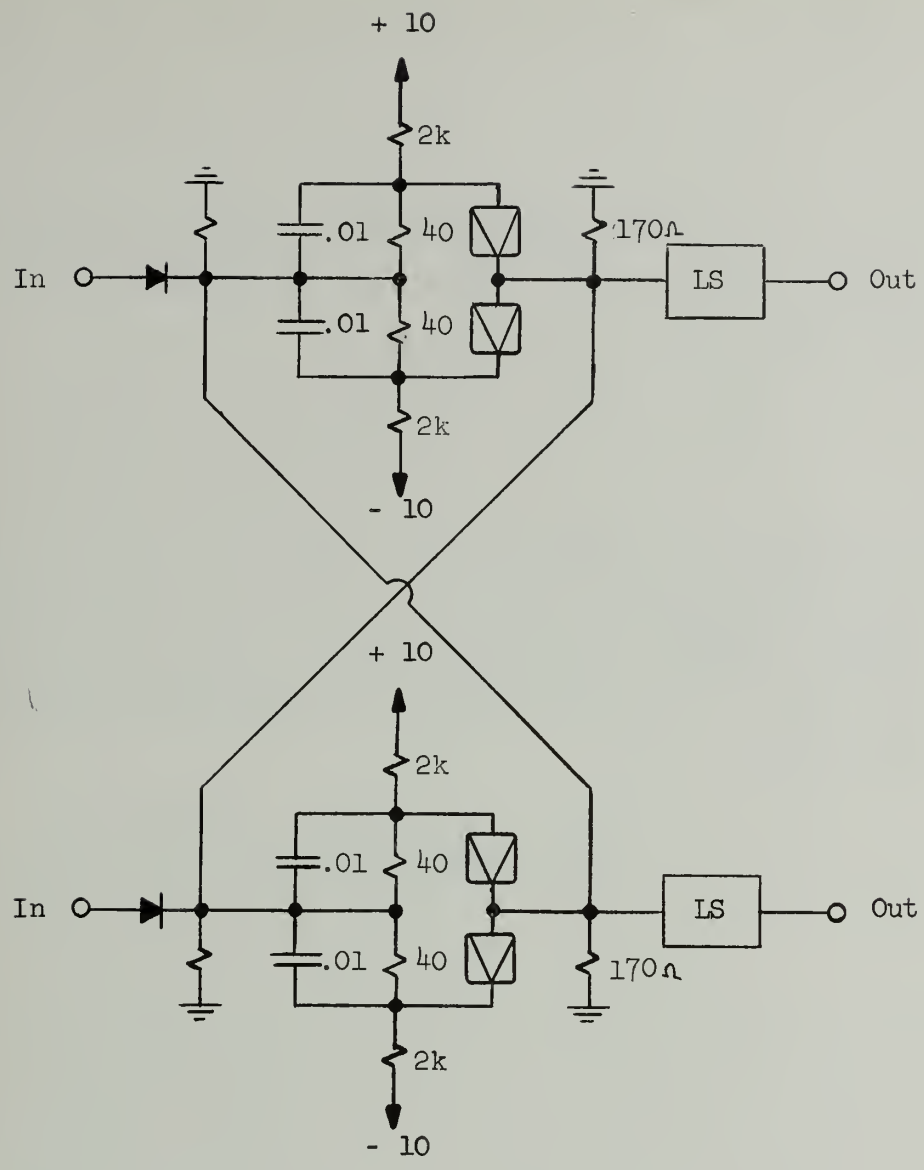

Figure 4

Symmetrical Flipflop Using Twins

4. Recalculation of Non-restoring AND's and OR's

Calculations have been made of the level shift toward zero for the non-restoring OR circuit, the non-restoring AND circuit, and the AND-OR complex.

The OR circuit calculations involved the two input configuration only. The fourteen calculated points were compared with the level shift

curves produced by G. A. Metze, March 17, 1960, and compared well. Input voltages compared were:

$$V_{in} = .9, \pm 2.5, \pm 3.2; \text{ F. O. } = 1, 2, 3.$$

The AND circuit calculations involved a two input configuration. Comparison with G. A. Metze's level shift curves was again satisfactory. Input voltages compared were:

$$V_{in} = .9, -2.5, -3.2, +2.5; \text{ F. O. } = 1, 2, 3.$$

Ten calculations were made.

The AND-OR complex calculations were made using Sir Kittsolver #8 on Illiac. Input voltage values were $V_{in} = -1, -2, -3$ volts; two, three and five AND's were used, all AND's having two inputs. Fanouts of 1, 2, and 3 were calculated. Note that the data only gave positive shifts toward zero for negative input values.

(W. J. Poppelbaum)

PART III

MATHEMATICAL METHODS

1. Configurations of Viscous Transition Regions (Supported in part by the National Science Foundation under Grant G9503.)

Computer programs have been written to try to find numerical solutions of the equations for regular and Mach reflection with a weak incident shock. These are the equations mentioned in the February monthly report. The two methods used are Newton's method where the derivatives are evaluated numerically and a minimization procedure involving a walk in the eight-dimensional space of the eight unknowns along the steepest gradient. A number of starting places for the initial approximation have been tried, but so far the only solutions are those with zero shock curvature corresponding to the regular reflection solution, if it exists, or the trivial solution of the non-viscous three shock theory.

(C. W. Gear)

2. Solution of Non-Linear Circuit Equations (Supported in part by the Office of Naval Research under Contract Nonr-1834(27).)

A. Sir Kittsolver One-hundred Series.

In a number of problems requiring extensive use of the Sir Kittsolver program the only results of the solution of the problem that are desired are the voltages at a few of the nodes of the circuit. Because of this and because the total running time consists of a relatively large amount of time in the printing of the final results, a special version of Sir Kittsolver was prepared in which the volume of output is greatly reduced. This version of Sir Kittsolver is known as the "one-hundred series", since the problem number is 100 + p where p is less than 100 and is equal to the problem number of the conventional Sir Kittsolver; thus, except for output format, SK 108 is identical to SK 8, and SK 109 is identical to SK 9, and so forth.

The format of the output for the one-hundred series is six lines of printing. One number appears on each line: on the first is printed the date number; on the following five the voltages on the first five variable nodes of the circuit are printed, the ordering being the same as their ordering on the data tape.

B. New Transistor Tables and Diode Tables in Sir Kittsolver.

The SK program does not take into account the effect of the voltage difference between the collector and base of a transistor in computing the emitter current (this will not be true for a new version of SK to appear in about 2 months). The emitter current is completely determined by the voltage difference between emitter and base. To partially correct this fault, a family of three transistor tables has been included to SK 8 and SK 9, numbered 1, 2, 3 which correspond to curves for V_{CB} (= Voltage (Collector) - Voltage (Base)) equal to -2v, -4v and -8v, respectively. These tables represent the characteristic curves for the GF45011 dated March 4, 1960. The user of SK specifies which curve he desires by giving the appropriate transistor table number. There is an addition "worst case" table, numbered four. This is composed of the upper curve for V_{CB} = -2v and the lower curve for V_{CB} = -8v; if the user specifies 4+ he, in effect, is calling for the upper curve of table 1 (V_{CB} = -2v); if the user specifies 4- he, in effect, is calling for the lower curve of table 3 (V_{CB} = -8v). Use of this composite table saves a little bit of computer time compared with using 1+ and 3- in the same circuit.

The diode table for the S-577G diode in SK 8 and SK 9 represents the outer characteristic curves for this diode on the drawing dated March 4, 1960. In all transistor tables and diode tables the reverse current characteristic curves are identical to those in SK 6.

C. Resolution of Some Convergence Difficulties.

In some cases, which come up in emitter-follower calculations, SK failed to converge. The reason for this was found and corrected in SK 9. This correction distinguishes SK 9 from SK 8 (as well as SK 109 from SK 108). In brief, the difficulty was due to the voltage increment used in the numerical estimation of the derivative of the current sum into a node with respect to the voltage on that node. In some instances this voltage increment was large compared to variations in the slope of the transistor curves resulting in bad estimates of the derivative. The fault was corrected by simply making the voltage increment appropriately small. It is not yet determined whether the failure of SK to converge in the memory sense amplifier problem has been resolved by this alteration.

(L. D. Fosdick)

PART IV

SWITCHING CIRCUIT THEORY

Computer Logic Programs

Mrs. Belford has completed the writing of her thesis entitled "Computer Logic Programs". A discussion of the problem is contained in the April, 1959 Technical Progress Report. The following is an abstract of her thesis.

Computer "logic" programs are essentially computer programs capable of analyzing other computer programs. In other words, while an ordinary computer program may be thought of as operating on given data to produce a (usually numerical) result, a logic program operates on given programs to produce some sort of information about those programs. Such a logic program might, for example, be used to prove mathematical theorems once the operations of a mathematical system have been defined in terms of computer programs.

Because the order codes of real computers are too complicated (containing orders of many different kinds) to be readily amenable to analysis, an imaginary, ideal computer was invented for an initial attempt at program analysis. This ideal computer is assumed to have an infinite, "associative" memory; that is, the information held in the memory consists of an infinite set of symbols and a relationship associating to every ordered pair of symbols from the set, a unique third symbol from the set. The order code of this computer consists of a single order--a "symbol transfer" in the following sense: An ordered set of four symbols a, b, c, d is specified. Then the symbol transfer causes a change in the association relationship for the memory, associating to the symbol pair c, d that symbol which is associated to a, b. It is shown that non-trival operations are able to be carried out on this computer, and that it is, in fact, able to compute any function computable by a Turing machine.

Various approaches toward program analysis are discussed. The best one appears to be a straight-forward examination of a program order-by-order, beginning at the first order of the program to be obeyed by the computer. All pertinent information is stored into a large chart, which allows ready access

to information about previous orders. Theoretically, examination of this chart should allow one to determine program behavior at any time.

Certain difficulties which arise in program analysis are described. For example, a program may contain finite or infinite "loops", or some order of a program may alter a later order. Some methods of getting around these difficulties are discussed. A number of special program types are looked at in detail, to determine under what circumstances they are readily analyzed.

Finally, a prototype logic program, capable of analyzing many non-trivial programs, is outlined in flow-chart form. Areas of possible improvement are pointed out and discussed.

PART V

ILLIAC USE AND OPERATION

New Illiac Codes

During the month of March four new routines were added to the Illiac Library.

V10-290 Generate a Random Normal Deviate (SADOI only). This routine uses the conventional random number generator V9, which generates random numbers uniformly distributed on the range -1 to 1 in order to generate a set of random numbers distributed normally on the range -4 to 4.

(D. W. Hutchinson)

Y5-291 Transfer Blocks of Words between the Drum and the Williams Memory. This routine is similar in effect to Routine Y1 except that it is shorter (35 versus 40 words) than Y1. In addition Y5 provides the same speed on record as on playback (10 + 1.3r ms.) whereas Y1 requires (10 + 1.8r ms.) on record. These improvements are achieved through the storage of differences which allows the additional sum checking loop on the record option to be eliminated.

(B. D. Elliott)

KSL 5.20-292 Matrix Addition or Subtraction. This routine will read two or more matrices from tape and produce the sum or difference of these matrices on an output tape. Several options are provided as to whether the matrices be added or subtracted, the number of matrices to be added together, and automatic scaling of the various input matrices.

(F. H. Shimamoto)

T7-293 1/2 sin X/X (SADOI only). This routine treats X as a double precision number and computes 1/2 sin X/X.

(M. E. Suhre, Jr.)

Illiac Usage

During the month of March specifications were presented for 31 new problems. This list does not indicate how the Illiac was used because large amounts of machine time may have been consumed by problems with numbers less than 1629. Numbers followed by T are for theses.

1629 Agricultural Economics. Estimation of Land Values. A prediction equation for land values in Iroquois County will be developed by the method of least squares. Data for two years (1957-1958) are available on sale price and soil productivity indexes on actual tracts sold. This equation will be useful in appraisal of land for taxation purposes, i.e. the appraisal should more adequately reflect soil productivity.

Least squares procedures will be used to fit the equation:

$$y = a + bx + cx^2 + dx^3$$

where y is the sale value reported and x is the soil productivity index.

1630 T Physics. Pi Meson Dispersion Relations. The relativistic dispersion relations for pi meson scattering and photoproduction have previously been derived in an approximation which related photoproduction amplitudes to the more easily experimentally measured scattering amplitudes, to an accuracy of about $\pm$ 10%. More recent experiments can attain greater accuracy than this, so that a better theoretical determination of photoproduction amplitudes is desirable. The dispersion relations for amplitudes of eigenstates of parity, total angular momentum, and isotopic spin can be written as coupled inhomogeneous complex integral equations, as follows:

$$M_{l,j,I,\alpha}(\epsilon) = M^0_{l,j,I,\alpha}(\epsilon) + \frac{P}{\pi}\int_1^\infty d\epsilon' \left\{ A_{l,j,I,\alpha}(\epsilon',\epsilon)\frac{M_{l,j,I,\alpha}(\epsilon')}{\epsilon'-\epsilon} + \sum_{l',j',I',\alpha'} B^{l',j',I',\alpha'}_{l,j,I,\alpha}(\epsilon',\epsilon)\frac{M_{j',l',I',\alpha'}(\epsilon')}{\epsilon'+\epsilon}\right\}$$

for photoproduction, and

$$f_{l,j,I}(\epsilon) = f^0_{l,j,I,\alpha}(\epsilon) + \frac{P}{\pi}\int_1^\infty d\epsilon' \left\{ C_{l,j,I}(\epsilon',\epsilon)\frac{f_{l,j,I}(\epsilon')}{\epsilon'-\epsilon} + \sum_{l',j',I'} D^{l',j',I'}_{l,j,I}(\epsilon',\epsilon)\frac{f_{l',j',I'}(\epsilon')}{\epsilon'+\epsilon}\right\}$$

for scattering.

Here f and M are the complex amplitudes, and A, B, C, D, f^0, and M^0 are known real functions. Restricting ϵ to small values allows the summations to be truncated to 8 terms, some of which can be further neglected.

This problem will involve finding a relation between f and M of the form $M_{l,j,I,\alpha}(\epsilon) = E_{l,j,I,\alpha}(\epsilon)\, f_{l,j,I}(\epsilon) + F_{l,j,I,\alpha}(\epsilon)$, such that f and M obey their respective dispersion relations within 1% or so over the range of ϵ considered, for the most important values of l,j, and I. When a satisfactory expression for M is found, the differential cross section can be calculated in the form $\frac{d\sigma}{d\Omega} = |\sum M_{l,j,I,\alpha}(\epsilon)\, G_{l,j,I,\alpha}(\epsilon, \cos\theta)|^2$ to be compared to experiment. The quantities E and F will be found by trial and error and iteration until a satisfactory fit is obtained. The principal value integrations will be performed by splitting the range of integration at the pole, allowing cancelation of the large integrands of opposite sign at the nearby mesh points.

1631 T Agronomy. Alternating Corn and Soybeans. The basic question to be investigated is concerned with whether alternating strips of corn and soybeans will yield more than growing the two crops separately.

The effects of the alternating system on some of the characteristics of the crops such as height and lodging of both corn and soybeans will also be studied. A split plot design is used.

1632 Agricultural Economics. Structure of the Export Market. The research problem relates to the effect of PL.480 operations upon the magnitude, composition, and direction of international commodity flows.

A multiple correlation model has been conceived to measure interrelationship between imports and exports and a number of independent variables and to obtain parameter estimates expressing import propensities and elasticities. The second phase of analysis pertains to the determination of the equilibrium level of national income by inserting the behavioral equations into the income equations and solving the resulting simultaneous equations.

1633 Finance. Bank Earnings and Federal Reserve. The problem involves a comparison of changes in the financial position of member banks with national income accounts, aggregate indicators and changes initiated by the Federal Reserve and Treasury. The aim is to discover the influence of Federal Reserve operations upon the earnings position of member banks.

1634 University High School. Semantic Differential: Mathematical Concepts. Data are available from 150 junior high school pupils in the form of Semantic Differential judgments of twelve mathematical concepts.

The problem involves preparation of two correlation matrices (12 x 12 symmetrical) for the two subsamples contained in the data, extraction of six centroid factors from each matrix, and rotation of the two factor matrices.

1635 Psychology. Generation of English Messages. As a continuation of a project for which Illiac time was formerly granted material gathered in these previous calculations are to be submitted to further analysis. An extensive sample of American spoken English was analyzed as to sequences of unique phoneme combinations and their frequency of occurence in the messages. These sequences formed the basic data for calculations of the transitional probabilities and entropies of the individual sequences and all messages. These data were secured from previous Illiac computations. It is now proposed that these data be utilized to generate messages which are based on the probabilities inherent in the original major sample already analyzed. This generation of messages is to be performed at various levels of approximation to English. That is, the phoneme sequences of one, two, three, etc. units in length will each be used as the basis for generation. It is hoped that in this manner it will be possible to demonstrate, with some force, the inherent structure of the spoken language. The program requires that the original sample of spoken English be placed in the drum storage unit and by means of successive returns to the random number generator, that the phoneme sequences be chosen and read out. The selection of the sequences to be output is determined by the level of approximation to be used and the relative redundancy of the various phoneme sequences at any given level.

1636 T Agronomy. Carbohydrate Reserves of Alfalfa Roots and Relation to Regrowth. The research is to determine if clipping alfalfa at different time intervals in the early summer will influence the level of carbohydrate root reserves of alfalfa. Also, the research is to determine the relationship of each of several carbohydrate constituents in alfalfa roots in early summer on summer regrowth.

General analysis of variance with linear and quadratic comparisons are needed to determine the first objective sited. Multiple regression of each carbohydrate constituent and combinations of these carbohydrate constituents on regrowth yield will be needed to determine the second objective.

1637 Agricultural Economics. Crop Acreage Prediction. A land allocation model has been developed for each of the 9 crop-reporting districts in Illinois. This model assumes that the 1960 acreage in each principal crop will represent a deviation from the 1959 acreage based on profit maximization of a relation containing expected prices and variable costs. Instead of the usual resource restrictions on profit maximization, the restrictions will be in the nature of boundary conditions placing limits on the acreage deviation from 1959. These boundary conditions may be interpreted as the inertia displayed by farmers in adjusting to new price-cost conditions.

A comparison of the predicted acreages generated by this model will be made with the official government estimates made by surveys.

The standard library routine M15-183 will be used.

1638 T Chemistry. Theoretical Calculation of Isotope Effect. The problem is the theoretical calculation of the isotope effect in the decomposition of formic acid. A four-center model is used to represent an approximation to formic acid.

A vibrational analysis is done on this molecule using Wilson's F, G matrices. Putting the resulting 6 x 6 matrices in the following secular equation, and solving this equation produces the desired vibrational frequencies:

$$|\underline{F} - \lambda \underline{G}^{-1}| = 0 .$$

1639 T Agronomy. A Comparison of Various Breeding Methods for Improving Persistency and Disease Resistance in Red Clover. Various breeding methods are being compared in order to determine which method is the most efficient for improving the crop. In this phase of the analysis, various plant characteristics are being correlated to determine whether any linkage relationships exist. Such information may be a valuable tool in future breeding and selection.

1640 Chemistry. Van der Waal's Counter. This program is a logical continuation of a previous Illiac routine (1505-A46). The purpose of the previous program was to generate large samples of three dimensional non-intersecting random walks. It is assumed that these walks represent a sampling of the possible configurations of long chain polymers. The purpose of this program is to compute various average geometric and physical properties,

weighting each configuration by a suitable factor depending upon energy considerations. Quantities of immediate interest are the mean square end-to-end distance, the average energy, and the radial mass distribution from the center of gravity.

Each step in a walk is represented on tape as a vector from the previous step. Walks are read in one at a time and the various quantities calculated. These intermediate results are stored on the drum. After all walks have been read the data on the drum is read back and the final averages computed.

1641 Chemistry. Helium Atom Ground State. A numerical method for solving eigenvalue problems in many variables (Bassett, Australian J. Phys., 1959, 12, 430) is to be tried out on the Schrödinger wave equation for the ground state of the helium atom. The main idea is to seek an expression for the eigenfunction as a sum of products of functions of one variable, the functions of one variable being represented numerically. The form of these functions of one variable is to be obtained by iterative solution of a stationary condition obtained from the variation principle (similar to that used in the Hartree-Fock method with superposition of configurations to get the radial dependence of the pre-electron functions).

The precise choice of arithmetic procedure is such that the numerical representation of the wave function which it produces is the exact fundamental eigenvector of a certain matrix; this matrix is such that, as the "mesh size" of the numerical representation tends to zero, the fundamental eigenvector and eigenvalue tend to the fundamental eigenfunction and eigenvalue of the Schrödinger wave equation for the ground state of the helium atom. This particular choice of arithmetic procedure has two consequences: (1) the procedure is valid even for a coarse mesh, so that the exploration needed to find a good starting point for the iterative processes can be done with a coarse mesh; and (2) the problem of round-off error in numerical differentiation, which would otherwise be acute (C. F. Hartree, "Numerical Analysis", Oxford, 1952, p. 116) is side-stepped.

The wave equation for the ground state of the helium atom reduces by symmetry to an equation in three variables. The variables used here are those used by Pekeris (Phys. Rev., 1958, 112, 1648), namely:

$$r_1 + r_{12} - r_2$$

$$r_2 + r_{12} - r_1$$

$$2(r_1 + r_2 - r_{12})$$

which possess the advantage of having a rectangular region of integration.

Probably the results of this work will be largely negative if it is not possible to obtain an eigenvalue correct to about eight significant figures, proved to be so by internal criteria, not by comparison with spectroscopic observation. The routines are designed to give an accuracy somewhat greater than this, as far as round-off error is concerned and also as far as truncation error in the differentiation and quadrature is concerned.

1642 State Water Survey. Collection Efficiency. From previous measurements and calculations, the drop-size distribution as a function of rainfall rate, synoptic type, and rain type have been determined. A part of the requirements of this research is to determine, if possible, the theoretical amount of atomic debris which would be collected by rainfall in falling through an atomic cloud. Since the aerodynamic collection efficiency is a function of both the debris-size distribution and the drop-size distribution and since the debris-distribution is variable with the weapon size, height of detonation, windfield and distance from detonation to point in question, the amount of rainout will be calculated for individual particle sizes. This will be calculated by Illiac using the formula:

$$P_r = \sum_s E(r,s)\ v_s\ F(s)$$

where $E(r,s)$ is the collection efficiency as determined by using Langmuir's equations of a raindrop of radius s for a debris particle of radius r. v_s is the terminal velocity of the drop of radius s and $F(s)$ is the size-distribution of raindrops of size s. These calculations will be performed for 18 different debris sizes ranging from 0.25 micron to 225 microns.

1643 Cornell University. Factor Analysis of Sinhalese MMPI Test Items. Previous analysis of items in a personality test (the MMPI) reveals 61 items which significantly differentiate highly westernized from a low westernization group of students in the University of Ceylon (and which meet certain other criteria). The computing problem is a factor analysis of these 61 variables, together with three other variables, making a total of 64 variables to be factored. Sample consists of 122 cases.

1644 Horticulture. Relation of Temperature to Rate of Development of Sweet Corn. The Illiac will be used to fit a cubic regression curve to the frequency distribution functions for various plantings of sweet corn over several years.

The temperature-development function will be studied for various stages of growth as well as to maturity.

An attempt will be made to determine which combination of soil and air temperatures will provide the optimum description for various stages of growth.

1645 Bureau of Educational Research. Specific Reliability. Under problem number 1345 a routine which gives the value of the phi coefficient when given the difficulty of two dichotomous items and the tetrachoric correlation coefficient between them has been programmed.

Under problem number 1517 a routine which gives the internal consistency reliability when a test is composed of dichotomous items and the difficulty of items and inter-items tetrachoric correlations are given has been programmed.

Using these routines, the present problem is to obtain the correlation between a specific test (composed of dichotomous items) and the universe of items from which the items in this test were drawn.

The steps to be taken are:

1. Form the universe of tests from the universe of items according to the given sampling plan.
2. Find mean covariance (i.e. $\phi/\sigma_i\ \sigma_j$) between each item in the specific test and the universe of tests, using phi coefficient routine.
3. Find the reliability of this test, putting the values obtained through step 2 in the internal consistency reliability routine (heterogeneous alpha routine).

1646 Physics. Ultrasonic Attenuation. In the calculation of the transmission of sound through superconducting media, it is required to evaluate the integral

$$I = \int_b^\infty \left\{f(y) - f(y+a)\right\} \frac{(y^2 + ay - b^2)}{\sqrt{y^2-b^2}\ \sqrt{(y+a)^2 - b^2}}\, dy,$$

where $f(y) = \frac{1}{1+e^y}$, and a and b are parameters defined by

$$a = \frac{\hbar w}{kT} = \frac{\text{energy of phonon}}{\text{Boltzmann's constant x Absolute temperature}}$$

$$b = \frac{\epsilon_0}{kT},$$

where ϵ_0 is the energy gap for the superconducting material.

The Illiac will be used to evaluate about 100 values of

$$I' = \int_{1.01b}^{nb} \left\{ f(y) = f(y+a) \right\} \frac{(y^2 + ay - b^2)\, dy}{\sqrt{y^2 - b^2}\,\sqrt{(y+a)^2 - b^2}} ,$$

where n is a parameter and equal to about 4, and the remaining parts of the integral are to be evaluated by hand, using simple approximations.

1647 Chemistry. Radiation Kinetics II. Similar to problems number 1031 and 1568, this problem involves a theoretical study of diffusion-kinetics in radiation chemistry. The earlier problems dealt with the cases of high and low intensity radiation, where the symmetry is such that the mathematical problem is the solution of a set of parabolic partial differential equations in two independent variables (time and one-space dimension). The new problem is to study the case of medium intensity radiation, which necessitates solving equations in three independent variables (time and <u>two</u> space dimensions). The equations will be solved by straightforward difference methods. Certain integrals over the variables will be computed by Simpson's rule.

1648 T Library Science. Voting Behavior Correlation. Illiac will be used to obtain a product-moment correlation matrix from scores on fifteen factors in a study of voting behavior on public library bond issues in Seattle, Washington.

1649 T Agronomy. The Effect of Spacing Within the Row on Yield and Other Characters. The objective of the study is to determine if a mathematical formula can be derived to compensate for blank spaces within the harvest row of grain sorghum in order to obtain more accurate performance tests. Major emphasis will be placed on number and size of spaces within the harvest row and its effect on plot yield and yields of the plants adjacent to a space.

The Illiac will be used to carry out an analysis of variance with single-degree-of-freedom breakdown on three sets of data.

The first set utilizes a split plot design and is composed of four problems (yield, test weight, days to bloom, and heads per plot). Each problem is composed of two varieties in eighteen spacing treatments in six replications.

The second set utilizes a split-split plot design and is composed of seven problems (plant height, peduncle length, head length, weight of grain of head, weight of 500 kernels, number of kernels in head, and test weight). Each

problem is composed of two varieties in four spacing treatments in seven plants in six replications.

The third set utilizes a split-split plot design and is composed of seven problems (plant height, peduncle length, head length, weight of grain of head, weight of 500 kernels, number of kernels in head, and test weight). Each problem is composed of two varieties in four spacing treatments in six plants in six replications.

Correlations will be computed on all possible combinations of all problems in each set of data.

1650 University High School. Factors Related to Mathematics Ability. Product moment correlations and phi coefficients are needed to find connections between certain school circumstances; acceptance by classmates, nervousness and bothersomeness, etc. and mathematics achievement and mathematics ability, and interest in mathematics.

Two groups are to be treated separately. Each group contains about 250 students. The study contains 23 to 45 variables, for which correlations are to be computed.

1651 Institute of Communications Research. Cross-Cultural Generality of Meaning Systems. The purpose of the research is to (1) obtain further evidence on the commonness of meaning systems across various culture and language groups; (2) develop, on the basis of this common semantic framework, standardized instruments for measuring non-material (subjective) culture in different parts of the world; and (3) apply these instruments to the study of certain critical concepts cross-culturally.

Initially, the techniques already developed using the Semantic Differential with Americans, will be applied to a systematic investigation of meaning systems in additional countries differing widely in both language and culture. Some of the places where investigations will be made are Finland, Egypt, Iraq, India, Hong Kong, and the Western European nations. If it is shown that there is a similarity of connotative meaning factors in these diverse groups, it will become possible to construct "common yardsticks" for measuring attitudes, stereotypes and values held by different language/culture groups in directly comparable fashion.

The Illiac will be used in the analysis of the data using factor analytic techniques. The library routines will be used.

1652 Illinois Natural History Survey. Physiology of Canada Geese. The data for this problem consists of body weights, weights of muscles and endocrine glands of Canada geese at all seasons of the year and when undergoing various stresses — moulting, wintering, migrating, nesting, etc. Although standard deviations, etc., are desired, the main objective is to show by regression curves the relation of various quantities to body weights at various times of the year.

1653 T Structural Research. Dynamic Strains Associated with a Propagating Brittle Fracture. The purpose of this research investigation is to develop an analytical solution for the determination of strains and displacements in a flat plate subjected to a propagating crack. Such a solution would make it possible to analyze the response of the surrounding media as a fracture propagated through a plate and to compare the results with available experimental data in an attempt to separate the parameters affecting crack propagation.

Thus far, attempts to find a classical mathematical solution to the propagating crack problem have been unsuccessful; hence, in this investigation a numerical approach will be used. This approach consists of representing a plate by a gridwork or lattice consisting of a series of rigid bars, deformable nodes and shear springs. The calculated response of the lattice would approximate the response of the actual plate; the accuracy of this method would, to a large extent, be dependent on the fineness of the lattice.

By considering each lattice bar to have one degree of freedom, equations of equilibrium can be written for each bar in the lattice. A crack is artificially initiated and propagated by separating the lattice at successive node points. At these points accelerations are determined from the equilibrium equations by including inertia forces. Hence solution of the problem will entail solving a system of second-order differential equations expressed in terms of bar displacements. The dynamic displacements can be found by a suitable numerical integration technique. Strains and strain rates can be calculated from the absolute bar displacements at different time values. Whether the crack will continue to propagate or stop will be determined by applying a particular fracture criteria to the node points.

In order to compare dynamic strains with static strains, this investigation will also include the determination of static displacements in a plate containing a crack. A solution of the static problem will involve only the solution of simple algebraic equations. To avoid scaling difficulties, the calculations will be made in floating decimal form.

Although a few standard library routines will be used in this study, the major portion of the code will be specially prepared to fit the problem.

1654 Theoretical and Applied Mechanics. Linear Pada Model. An unbalanced rigid cylinder spins in bearings which are supported by linear springs and viscous damping elements on a rigid mass which itself is spring-supported to ground. The effects of the parameters specifying the system on the degree of dynamic alignment of the cylinder are to be determined.

This involves the routine solution of two sets of twelve linear algebraic equations, for various values of system parameters. Also involved is routine algebraic computation of the coefficients and also some functions depending on the solution.

1655 Bureau of Educational Research. Redundancy Between Test-Batteries. The problem is to find a concise expression for the relation between two sets of variables. This expression should give information about the amount of overlap between the two sets in such a form as: "Set A and set B both give approximately equally good estimates of verbal ability"; and should provide an answer to a question like: "What is measured by set A but not or not very well by set B?".

Different ways of analyzing data will be tried out, as e.g. partialling out one set of variables from the other set by means of a square root analysis and then factor analyzing the residual matrix with the centroid method. Different sets of data will be analyzed to test the interpretability of the results.

1656 Architectural Engineering. Matrix Slope Deflection Solution of Industrial-Type Gabled Frame. This problem forms part of the course work for Architecture 456 which involves a study of the matrix slope deflection method of solving structural problems.

As a special problem for the course an industrial gabled frame has been chosen. Due to its six sidesway conditions, rather lengthy calculations are necessary in order to solve for the moments and rotations at the ends of each member. The calculations have already yielded a 13 x 13 matrix which must be inverted following the standard library procedure M-13. The work will then be continued on a desk calculator to complete the solution of the moments and rotations by multiplying the inverted matrix by the load conditions.

1657 Agronomy. Tissue Testing In Corn. Three years of corn data are to be analyzed as single years and also as the combined three years. Data to be analyzed by analysis of variance include yield in bushels per acre and the following leaf nutrients as percentages: nitrogen, potassium, calcium, magnesium and phosphorus.

1658 T Agronomy. Multiple Regression Analysis. Two years' data, 96 observations per year, have been obtained. A regression and correlation analysis for each year and for the combined data for the two years will be made. The variables are nitrogen (N) at four levels, population (P) at three levels, and irrigation (W). The cross products are NP, N^2P, NP^2, NW, and PW. Three regression equations as follows are to be obtained:

yield = function of nitrogen rate, population, water.

yield = function of leaf nitrogen, population and water.

leaf nitrogen = function of nitrogen rate, population and water.

The standard library routine K-16 will be used.

1659 Aeronautical Engineering. Mapping of Iso-lines. It is often necessary to find the iso-lines of a function such as a velocity potential, pressure, or rate of heat generation. The values of the function are assumed to be given for each point in a two-dimensional grid.

The program being developed will use these function values to construct a set of curves, the iso-lines, on each of which the function has a constant value.

Table I shows the distribution of Illiac machine time for the month of March.

TABLE I

	Hrs:Min	
Scheduled Maintenance	63:37	
Unscheduled Maintenance	10:51	
Drum Engineering	12:41	
R.A.R.	:19	
Leapfrog	9:25	
Wasted	1:53	
Library Development	6:30	
Demonstrations	19:38	
Classes	18:48	
		143:42

(cont'd.)

TABLE I
(cont'd.)
Use by Departments

	Hrs:Min
Agricultural Economics	11:34
Agronomy	10:20
Animal Science	6:04
Bureau of Economics and Business Research	:04
Bur. of Educational Research (PH-M1839)	1:27
Bureau of Educational Research	3:42
Chemistry (NSF G7336)	7:50
Chemistry (NSF G5907)	:03
Chemistry	58:13
Coordinated Science Laboratory	67:25
Digital Computer Laboratory (NSF G9503)	7:57
Digital Computer Lab. (AEC AT(11-1)-415)	65:38
Digital Computer Laboratory	1:19
Economics (NSF G7056)	2:19
Economics	:16
Education (IREC)	:32
Electrical Engineering (Nonr 1834(22))	5:31
Electrical Engineering (NSF G7421)	3:65
Electrical Engineering (NASA-NSG 24-59)	3:10
Electrical Engineering (AF33(616)6079)	:20
Electrical Engineering	2:49
Finance	:31
Food Technology (50-343)	4:07
Geology	:11
Institute of Communications Research	:31
Library Science	:06
Mathematics	2:20
Mechanical Engineering	7:51
Medicine	2:15
Mining and Metallurgical Eng. (TRUS AF6770)	:39
Music	:36
Petroleum Engineering	1:32
Physics	25:19
Psychology (M-1733)	7:23
Psychology (SAE 8383)	16:12
Psychology (1715)	:42
Psychology (Nonr 1834(11))	1:53
Psychology	50:18
State Geological Survey	:25
State Natural History Survey	2:38
State Water Survey (DA-36-039-SC75055)	8:25
State Water Survey	1:03
Structural Research (Nonr 1834(03))	1:44
Structural Research (AASHO Road Test)	3:00
Structural Research (NSF G6572)	:26
Structural Research	39:44

(cont'd.)

TABLE I
(cont'd.)

	Hrs:Min		
Sociology	:06		
Student Counseling	3:40		
Theo. and Appl. Mech. (NOBS 72069)	:07		
Theo. and Appl. Mech. (AF(616)6643)	:35		
Theo. and Appl. Mech. (DA-11-070-508 ORD 593)	:06		
Zoology	:18		
Eastern Illinois University	:18		
		445:39	
			589:21

Error Frequency and Analysis

The machine is normally used for "engineering" and maintenance between 7 a.m. and 10:30 a.m. Since the periods between 7 a.m. and 10:30 a.m. together with certain irregular periods, such as Saturdays and Sundays, are devoted to a heterogeneous group of engineering, maintenance, and laboratory functions, it is more instructive, from an error standpoint, to look at the periods between 10:30 a.m. and 7 a.m. of the next day in order to make an observation of the error frequency in the machine. This is the actual period when the machine is designated for use, although certain engineering procedures frequently require the scheduling of extra maintenance time. With this in mind, a summary table has been prepared using the period between 10:30 a.m. and 7 a.m. of the next day. This table lists the running time when the machine was operating, the amount of time devoted to routine engineering, the amount of time devoted to repairs because of breakdowns, and a number of failures while the machine was listed as running. Each failure was considered to have terminated a running period and was followed by a repair period in preparing this table. Since the leapfrog code is our most significant machine test, the length of time which it has been used on the machine is listed separately, together with the number of errors associated with that particular code. This information for the month is presented in Table II.

It is important to notice that, except during scheduled engineering periods, any interruption of machine time that was not planned is considered a failure in this table. In rare cases, where the failure is not known until a later time, it is possible that no repair period is associated with the failure.

TABLE II

DATE	RUNNING OK TIME	REPAIR TIME	SCHEDULED ENGINEERING	INTERRUPTIONS OR FAILURES STOPPING OK TIME	TYPES OF INTERRUPTIONS OR FAILURES CAUSING REPAIR TIME	WASTED	LEAPFROG	FAILURES STOPPING LEAPFROG
3/1/60	18:54	1:58	3:08	3	(1-3) Drum failure	0	:00	0
3/2/60	21:44	:00	2:16	0		0	:00	0
3/3/60	20:38	:00	3:22	0		0	:20	0
3/4/60	21:48	:00	2:12	0		0	:20	0
3/7/60	20:08	:29	3:23	1	(1) Drum failure	0	:20	0
3/8/60	19:33	:53	3:34	2	(1) Drum failure (2) Reader "B" error	0	:20	0
3/9/60	20:42	:20	2:58	1	(1) Unknown	0	:13	0
3/10/60	19:38	1:11	3:11	3	(1) Scope failure (2) Unknown (3) Input failure	0	:42	0
3/11/60	22:55	:00	1:05	0		0	:40	0
3/14/60	20:29	:17	3:14	2	(1) Unknown (2) Input	0	:07	0
3/15/60	20:43	:00	3:17	0		0	:20	0
3/16/60	19:25	1:19	3:16	2	(1) Drum (2) Punch 1 failed to punch 1 holes	0	:20	0
3/17/60	21:18	:12	2:30	1	(1) Punch 3 <u>or</u> Reader B failure	0	:20	0
3/18/60	22:12	:00	1:48	0		0	:27	0
3/21/60	19:11	2:19	2:30	4	(1) Drum failure (2) Reader"H" error (3) Memory failure 2^{-39}(4) Drum failure	0	:21	0
3/22/60	21:06	:24	2:30	2	(1) Power supply +150v (2) Unknown	0	:20	0
3/23/60	20:56	:34	2:30	1	(1) Drum failure	0	:20	0
3/24/60	21:12	:01	2:47	1	(1) Unknown	0	:20	0
3/25/60	21:05	:25	2:30	2	(1) Memory 2^{-35} (2) Unknown	0	:20	0
3/28/60	22:02	:03	1:55	1	(1) Input-output	0	1:00	0
3/29/60	20:27	:00	3:33	0		0	:20	0

TABLE II (cont'd.)

DATE	RUNNING OK TIME	REPAIR TIME	SCHEDULED ENGINEERING	INTERRUPTIONS OR FAILURES STOPPING OK TIME	TYPES OF INTERRUPTIONS OR FAILURES CAUSING REPAIR TIME	WASTED	LEAPFROG	FAILURES STOPPING LEAPFROG
3/30/60	19:59	:31	3:30	1	(1) Drum failure	0	:20	0
3/31/60	21:03	:00	2:57	0		0	:00	0
TOTALS	477:08	10:56	63:56	27		0	7:50	0

This over-all system has been adopted because it makes it possible for a machine user to estimate directly the probability that the machine will be "running" any instant of time and the probability of a failure during any given interval of running time.

Table III presents a summary of errors or interruptions for March.

TABLE III

Reader	2
Punch	1
Memory	2
Input-Output	4
Scope	1
Drum	10
Power Supplies	1
Unknown	6
TOTAL	27

PART VI

IBM 650 USE AND OPERATION

New 650 Codes

During the month of March two new programs were added to the Digital Computer Laboratory IBM 650 Library.

P8'-64' Plotting With 407 On-Line. This routine actually uses the 120 print wheels of the 407 to print the ordinates of a graph and the motion of the paper to plot the abcissae of that graph. 1 to 8 variables may be plotted simultaneously.

(S. J. Penny)

V1'-65' Fixed Point Legendre Polynomials. Given n and x, this routine will compute the nth order Legendre polynomial for the argument x. The routine is in fixed point and uses the well-known recurrence relation to generate the Legendre polynomial.

(S. J. Penny)

IBM 650 Usage

During the month of March problem specifications were presented for two new problems. This list does not indicate how the IBM 650 was used because large amounts of machine time may have been consumed by problems with numbers less than 93'. Numbers followed by T are for theses.

93' Mining and Metallurgical Engineering. Linear Programming of a Coal Washing Plant. The purpose of the problem is to demonstrate that linear programming can be of value to the coal industry by determining the coal products and their amounts that will yield maximum net profit in a particular coal washing plant. The washing plant of the Old Ben Corporation No. 9 mine has been chosen as a typical plant to demonstrate this technique. The plant cleans

10,400 tons of raw coal per day and can produce 24 final single products of different sizes, sales prices, and costs plus 10 different blends. There is considerable choice not only in the products that can be sold but also in the way that they can be made.

The model includes 55 equations representing material balances, process proportions, blending proportions, sales restrictions, and quality specifications. There are 64 structural variables in the model.

The program permits use of a variable resource which, for this problem, would be the input.

94' T Agronomy. A Biometrical Analysis of all Possible Crosses of Four Height Types of Sorghum. Variances of Parents and F_2's (second generation) will be used to estimate heritability of various characters. There are four parent populations and six F_2 (second generation) populations in four replications. Each plat has three rows with twenty plants per row (60 per plat). It is necessary to calculate within-row variances, within-plat variances plus an analysis as a randomized complete block design.

Table I' shows the distribution of the IBM 650 machine time for the month of March.

TABLE I'

		Hrs:Min	
Regular Maintenance		14:37	
Unscheduled Maintenance		17:57	
Library Development by DCL		19:58	
Air Conditioning Maintenance		7:49	
Log Summation		:27	
Demonstration		:48	
Classes		4:22	
Civil Engineering 297	2:03		
Civil Engineering 391	2:02		
Mathematics 395	:17		
Wasted		31:01	
			96:59

(cont'd.)

TABLE I'
(cont'd.)

Use by Departments

		Hrs:Min		
Agronomy		1:17		
Chemistry		8:42		
Digital Computer Laboratory		5:13		
Graduate College		6:30		
Physics		5:48		
Statistical Service Unit		97:07		
Animal Science	1:04			
Bur. of Ed. Res.	:33			
Bur. of Inst. Res.	6:22			
Business Office	35:33			
DHIA	40:39			
Education	6:50			
Horticulture	:03			
Min. and Met. Eng.	1:11			
Psychology	2:07			
Student Coun. Ser.	2:45			
Structural Research		2:00		
Theoretical and Applied Mechanics		:09		
			126:46	
				223:45

Error Frequency and Analysis

The IBM 650 is normally on from 8:00 a.m. to 5:00 p.m. The machine is used for preventive maintenance from 8:00 a.m. to 12 noon on Mondays.

Table II' gives the daily breakdown of machine time with respect to wastage and unscheduled maintenance.

Table III' presents a summary of errors for March.

TABLE III'

Blank on multiple bits		4
Floating Point		1
Air Conditioning		1
Clocking		8
Tape Units		5
Not recognizing load point	1	
Spilling tape	4	
407		4
Fuse blew	3	
Carriage clutch	1	
Checking lights		1
Storage Unit		2
533		2
Flickering power	1	
Brush tracking	1	
Alphabetic buffer		5
Total		33

TABLE II'

DATE	RUNNING OK TIME	SCHEDULED ENGINEERING	REPAIR TIME	WASTED	FAILURES STOPPING OK TIME	AIR CONDI-TIONING	TYPES OF FAILURES CAUSING REPAIR TIME
3/1/60	8:40			:50	0		
3/2/60	3:52			5:08	2		(1) Lost a sign going from drum to location 9020 in core. (2) tape unit 3 not recognizing load point.
3/3/60	5:23			3:52	0		
3/4/60	5:16			3:44	0		
3/7/60	4:22	4:04		:34	0		
3/8/60	9:12			:07	0		
3/9/60	8:26		:14	:50	2		(1) Fuse blew in 407. (2) Floating point
3/10/60	8:09			1:01	0		
3/11/60	7:46			1:14	0		
3/14/60	:00	:46		:25	1	7:49	Air conditioning out due to split wire.
3/15/60	8:35			:25	4		(1-3) Clocking.error.(4) Tape mangled.
3/16/60	5:45	2:31		:44	1		Alphabetic printing not working right.
3/17/60	8:33			:27	2		(1-2) Storage unit errors.
3/18/60	6:34			2:26	0		
3/21/60	1:59	3:58		3:03	1		Flickering power light on 533.
3/22/60	5:29			3:31	2		(1-2) Clocking errors.
3/23/60	6:30		2:11	:19	3		(1-2) Storage unit errors (3) Tape mangled
3/24/60	2:00		7:38	:15	2		(1-2) Storage selection errors.
3/25/60	8:50			:20	3		(1) Mult. bits on a read order (2) Blank bits. (3) Unit 2 spilled tape.
3/28/60	:54	3:18	4:37	:18	5		(1-3) Clocking errors. (4) Checking light (5) Blank bits in upper accumulator.
3/29/60	10:52		:35	:36	0		

TABLE II' (cont'd.)

DATE	RUNNING OK TIME	SCHEDULED ENGINEERING	REPAIR TIME	WASTED	FAILURES STOPPING OK TIME	AIR CONDI-TIONING	TYPES OF FAILURES CAUSING REPAIR TIME
3/30/60	12:14		1:23	:21	2		(1) 407 had loose screw in carriage clutch. (2) 533 brush tracking.
3/31/60	13:00		1:19	:31	3		(1) Tape unit 2 spilled tape on rewind. (2-3) 407 blew 3 fuses on each failure.
TOTALS	152:21	14:37	17:57	31:01	33	7:49	

PART VII

GENERAL LABORATORY INFORMATION

Seminars

"Applications of Tunnel Diodes in Switching Circuits", by Mr. Toshiro Kunihiro, Digital Computer Laboratory, University of Illinois, March 7, 1960.

"A Description of ALGOL", by Dr. Hermann Bottenbruch, Oak Ridge National Laboratory, March 14, 1960.

"Chebyshev Approximation As a 2-Person Game", by Dr. E. Stiefel, Institute for Applied Mathematics, Zurich, Switzerland, March 21, 1960.

"Topics in the Approximation of Functions", by Professor D. B. Gillies, Digital Computer Laboratory, University of Illinois, March 28, 1960.

Reports

Report No. 97, "Separate Carry Storage Adders", by Dr. S. Takahashi, March 7, 1960.

Personnel

The number of people associated with the Laboratory in various capacities is given in the following table:

	Full-Time	Part-Time	Full-time Equivalent
Faculty	9	2	10.5
Research Associates	1	-	1.0
Graduate Res. and Teaching Assts.	5	34	22.4
Graduate Fellows	2	-	2.0
Administrative and Clerical	5	-	5.0
Other Nonacademic Employees	28	4	29.5
Totals	50	40	70.4

The Laboratory Advisory Committee consists of Professors H. C. Brearley, L. D. Fosdick, D. B. Gillies, G. A. Metze, D. E. Muller, T. A. Murrell, W. J. Poppelbaum, J. E. Robertson, J. N. Snyder and A. H. Taub.

UNIVERSITY OF ILLINOIS
GRADUATE COLLEGE
DIGITAL COMPUTER LABORATORY

TECHNICAL PROGRESS REPORT

PART I - HIGH-SPEED COMPUTER PROGRAM
PART II - CIRCUIT RESEARCH PROGRAM
PART III - MATHEMATICAL METHODS
PART IV - ILLIAC USE AND OPERATION
PART V - IBM 650 USE AND OPERATION
PART VI - GENERAL LABORATORY INFORMATION

April, 1960

PART I

HIGH-SPEED COMPUTER PROGRAM

This work is supported in part by Contract No. AT(11-1)415 of the Atomic Energy Commission and in part by the University of Illinois. Contract No. AT(11-1)415 is supported jointly by the Atomic Energy Commission and the Office of Naval Research.

A. Logical Design

Part of the division predictor logic was redesigned and brought up-to-date with respect to the new fan-out rules for AND-OR complexes. A new estimate was made on the number of transistors required for the predictor on the basis of two wire logic throughout and speed independent logic in the fast loop. This design exclusive of the control will cost at least 1,500 transistors.

In light of this estimate the predictor is being re-evaluated at the present time. The possibility of using a binary division and/or making use of part of the assimilator logic is being investigated.

(J. O. Penhollow)

B. Circuits

An Eccles-Jordan Flipflop was designed with complementary outputs, each of which has a fan-out of 5.8. The flipflop is set by means of two steering diodes, one for state "1" and the other for state "0". It therefore can be set with positive signals only. This memory element should be useful in control circuit applications.

(N. H. Johnson)

Because a new circuit is formed with every new logical function that is realized in matrix logic, an economical tolerance analysis of these circuits is desired.

The method used for maximum D.C. shift in the AND-OR complex was extended to matrix logic by a graphical procedure, to provide outer bounds on the shifts. However, because the logical input combinations tending to

effect maximum shift are not used in most applications, a separate analysis for each input combination used is necessary for reasonable accuracy. No practicable graphical approach was found for the general case in which voltage spreads on individual inputs differ significantly.

(R. R. Shively)

The emitter follower and switching amplifier calculations accomplished in February using P.S. #1455 were repeated using the new transistor and diode curves. The version of P.S. #1455 used was Sir Kittsolver #8. This version had some convergence trouble too, and Sir Kittsolver #9 was an attempt to remedy the situation. Plots of the data obtained above must be drawn yet.

A series of tests was started to determine the sensitivity of the speed of the switching amplifier and emitter follower of a NOT circuit to overcurrent. The first conclusion reached was a small-scale verification of the result determined experimentally by G. Leichner in Appendix II of Report No. 86 and theoretically by T. Kunihiro in Report No. 94 that the switching speed of a switching amplifier is essentially independent of the $\alpha_{D.C.}$ of the switching transistor. What this implies for this set of tests is that overcurrent just to accommodate low α transistors is not necessary to keep the speed of a NOT circuit high. The tests also indicate that if an amount of current is used to switch the switching amplifier at its base which is equal to the worst case D.C. current required by the switching amplifier at its base, adequate operating time will be attained by the NOT circuit. Improvement over this "adequate" operating time is on the order of 1 mμs. per 0.1 ma. excess base drive to drive the base in the negative direction and on the order of 1 mμs. per 0.2 ma. excess base drive to drive the base in the positive direction.

(J. L. Muerle)

C. Core Storage Unit

Construction of the 64-word memory test unit was about 50% complete at the end of April.

Revision of the designs of all memory circuits has been initiated. These revisions are necessary because of modifications in basic diode and transistor specifications.

(S. R. Ray)

D. Input-Output and Auxiliary Storage

Early in the month, Ampex representatives installed several modifications on our FR300 tape transport. These included spring-loaded arms to press the tape where it winds on the reel to produce a tighter wind. So far the arms have been successful, in that no more pack slip has been observed. Each arm terminates in a polished steel shoe, which slides along the tape. Their effect on tape life has not yet been determined.

(H. C. Brearley)

Transverse dropout tests were continued. New reels of Ampex C-1 tape have been obtained for further dropout studies. A test circuit was designed and built to simulate dropouts manually so that all dropout circuitry could be checked for accuracy.

(C. N. Liu and T. C. Piper)

Work continues on the remote control chassis for the FR300. One portion is in the process of being built, while the rest is being put on paper.

The equipment which records numbers of pinch roller operations and running time for the different tape speeds has been put into operation. A log book of machine hours and other data is also being kept.

Some data and pictures have been taken of start and stop times of the FR300. It has been found that start times are of the order of 1.5 ms. and stop times about 1.2 ms. More data will be taken in the future concerning other mechanical characteristics of the machine.

(L. J. Peek, Jr.)

Design of the 50-volt clock pulse generator was completed. Work was begun on the low-frequency pulse train generator for use in testing program restrictions of the FR300.

(R. L. Cummins)

E. Circuit Analysis

The new version of Sir Kittsolver identified as Sir Kittsolver II, which is to form the heart of the Grand Pilot program for tolerance analysis, is nearing completion. The "input", "set-up", and "equation solving" routines have been individually checked and debugged. The "data change" and "output" routines remain incomplete. Sir Kittsolver II contains many improvements over Sir Kittsolver, the major ones being: input has been cleaned up so that the awkward restrictions on the use of letter shift and figure shift have been removed and one does not have to scale any numbers; the set-up time and data change time have been greatly reduced; the table look-up time for diodes and transistors has been reduced; the dependence of emitter current on V_{BC} (base to collector voltage) has been taken into account; the final output will print the complete circuit only once in a series of runs and thereafter only print the circuit number; a measure of the accuracy of the result will appear on the output.

(L. D. Fosdick and M. A. Cross)

PART II

CIRCUIT RESEARCH PROGRAM

(Supported in part by the Office of Naval Research under Contract Nonr-1834(15).)

1. Summary of the April Program

As usual research was carried on in several directions:

a) J. Karge worked on the tolerance analysis of the new AND-OR complex as well as that of the other non-restoring circuits.

b) H. Guckel redesigned the flowflop to use GF45011 transistors in a modified topology.

c) T. Kunihiro worked on some of the more theoretical aspects of tunnel diodes and also on flow-gating drivers.

2. Tolerance Analysis of Non-Restoring Circuits

The curves for the "maximum level shifts of the output voltage" vs. "input voltage" for non-restoring logical circuits computed and published by G. Metze on the 17th of March has been verified.

The tolerance analysis to determine the maximum level shifts of the output voltage was based upon the data for the electrical characteristics of the GF45011 transistor and S577G diode released the 4th of March. Interpolation of the V_{cb} curves is necessary since V_{cb} is a function of the input voltage.

Complex AND-OR

The topology of the "complex AND-OR" has been altered to reduce the maximum level shift of the output voltage; this is accomplished by the elimination of one diode (See Figure 1).

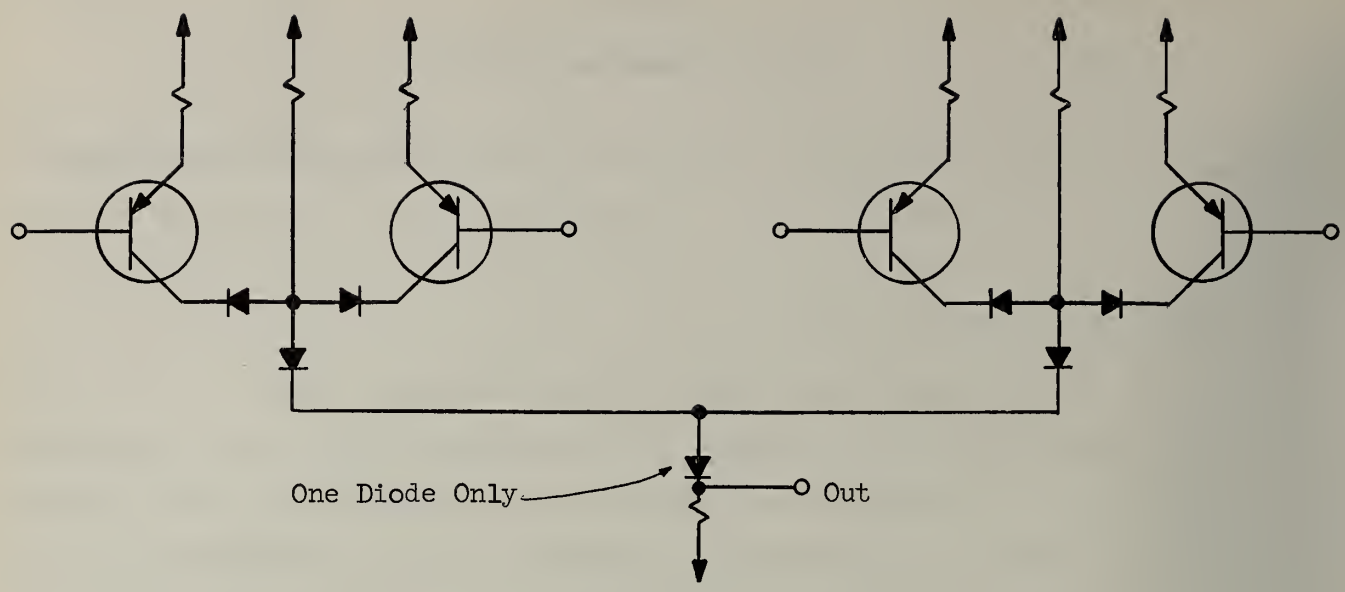

Figure 1
Modified AND-OR COMPLEX

Tolerance analysis data for the AND-OR complex was computed by use of the Sir Kittsolver program for Illiac. The present Sir Kittsolver program does not possess the ability to interpolate the V_{cb} curves for a V_{eb} corresponding to an I_e for a given input voltage. Interpolation can be reduced by selecting input voltages which will correspond to the V_{cb} curves for the GF45011 transistor. Dr. Fosdick is presently engaged in writing a Sir Kittsolver program which will possess the ability to interpolate the V_{cb} curves.

Non-Restoring AND

Tolerance analysis of the non-restoring "AND" is included in the analysis of the "COMPLEX AND-OR" circuit, since the non-restoring AND is a special case.

The "maximum level shifts of the output voltage" vs. "input voltage" were determined by hand computations in addition to the solutions determined by Sir Kittsolver. The tabulation of level shifts corresponding to a non-restoring AND with two inputs is shown below.

MAXIMUM LEVEL SHIFT

Fan-Out	-3.2v	-2.5v	+2.5v	+3.2v
1	+0.348	+0.327	-0.463	-0.474
2	+0.407	+0.394	-0.463	-0.474
3	+0.476	+0.456	-0.463	-0.474

Non-Restoring OR

Tabulation of the level shifts corresponding to a non-restoring "OR" circuit with two inputs is shown below.

MAXIMUM LEVEL SHIFT

Fan-Out	-3.2v	-2.5v	+2.5v	+3.2v
1	+0.305	+0.288	-0.243	-0.240
2	+0.330	+0.316	-0.243	-0.240
3	+0.345	+0.343	-0.243	-0.240

The above data agrees favorably with the data computed by G. Metze. Deviations are the result of the failure to interpolate the V_{cb} curves.

3. Flow-Gating

In order to get an idea of the maximum possible speed of the flow-gating system as a whole, a GF45011 complex was designed and tested. In all cases the normal component specifications were used. The flipflop shown in Figure 2 is tolerance stable. There is little hope that a faster system is possible with this technique. The following operation times are not typical but were obtained from a three-bit register:

1. Read-out cycle (including all driver times) $\sim$50 mμs.
2. Read-in cycle (including all driver times) $\sim$120 mμs.

The times quoted are those observed on the slowest one of the units. The drivers used for this experiment were built independently of cost: Figure 3 shows the read-out driver and Figure 4 the read-in driver.

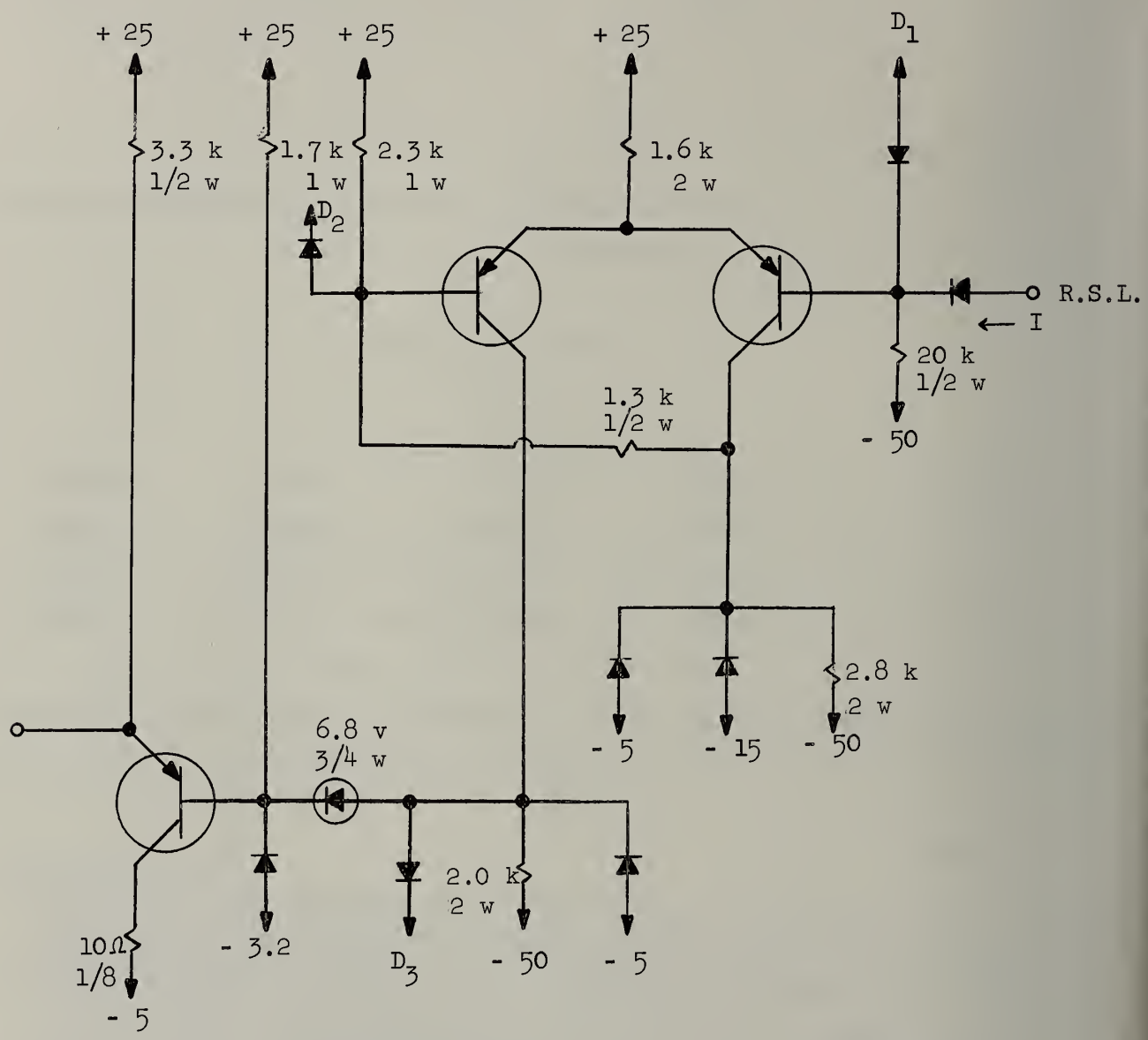

	Normal + 6.8 v	Normal + 4 v
	Gate 0_v	Gate - 4 v
Input requirement:	$+ 1.5 \leq V_{in} \leq 3.2$	+ 2.81 ma max.
	$- 3.2 \leq V_{in} \leq 1.5$	2.54 ma max.
Output requirement:	Same as F-element	

Figure 2

GF45011 Flowflop

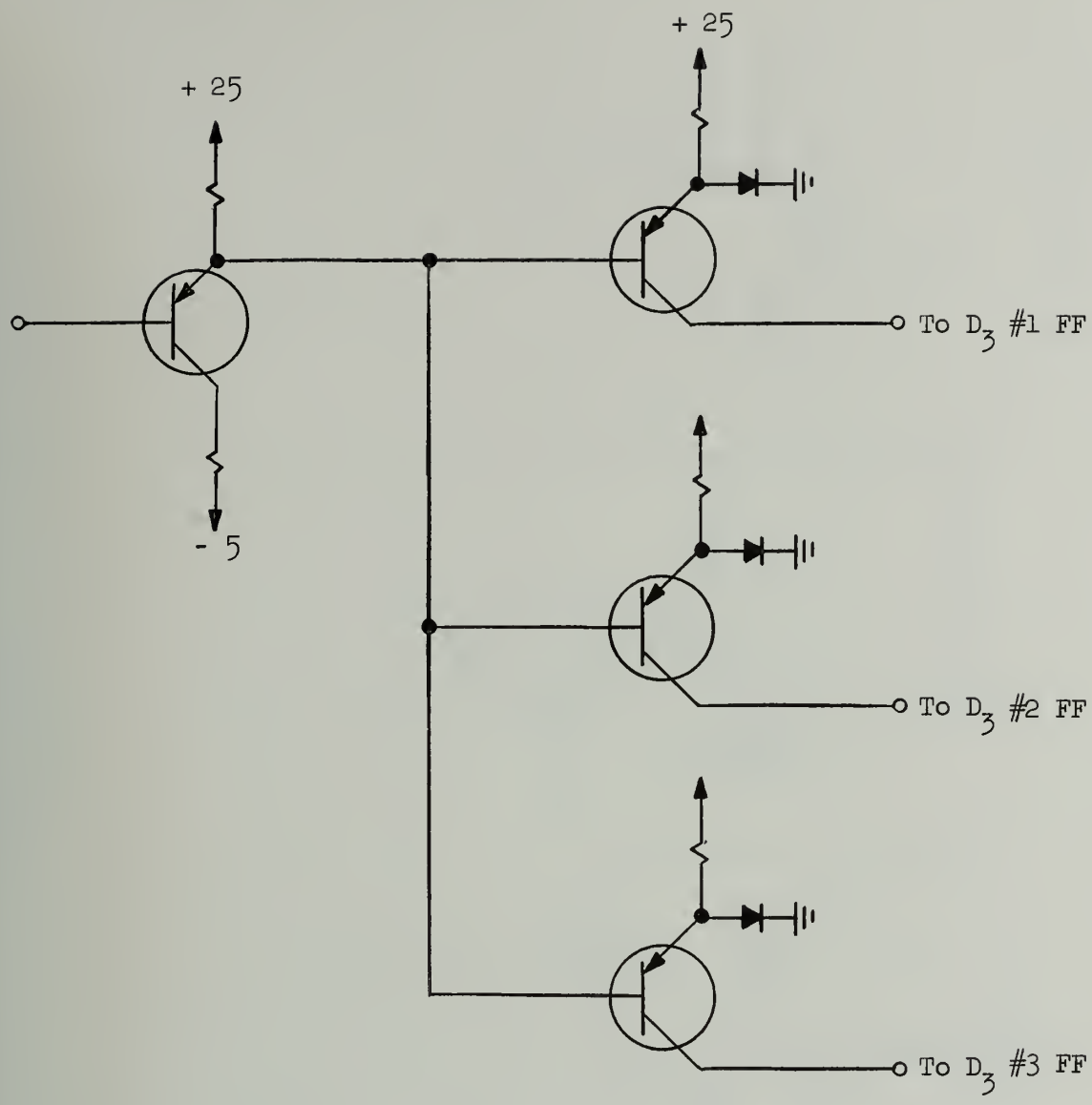

Figure 3
Read-Out Driver

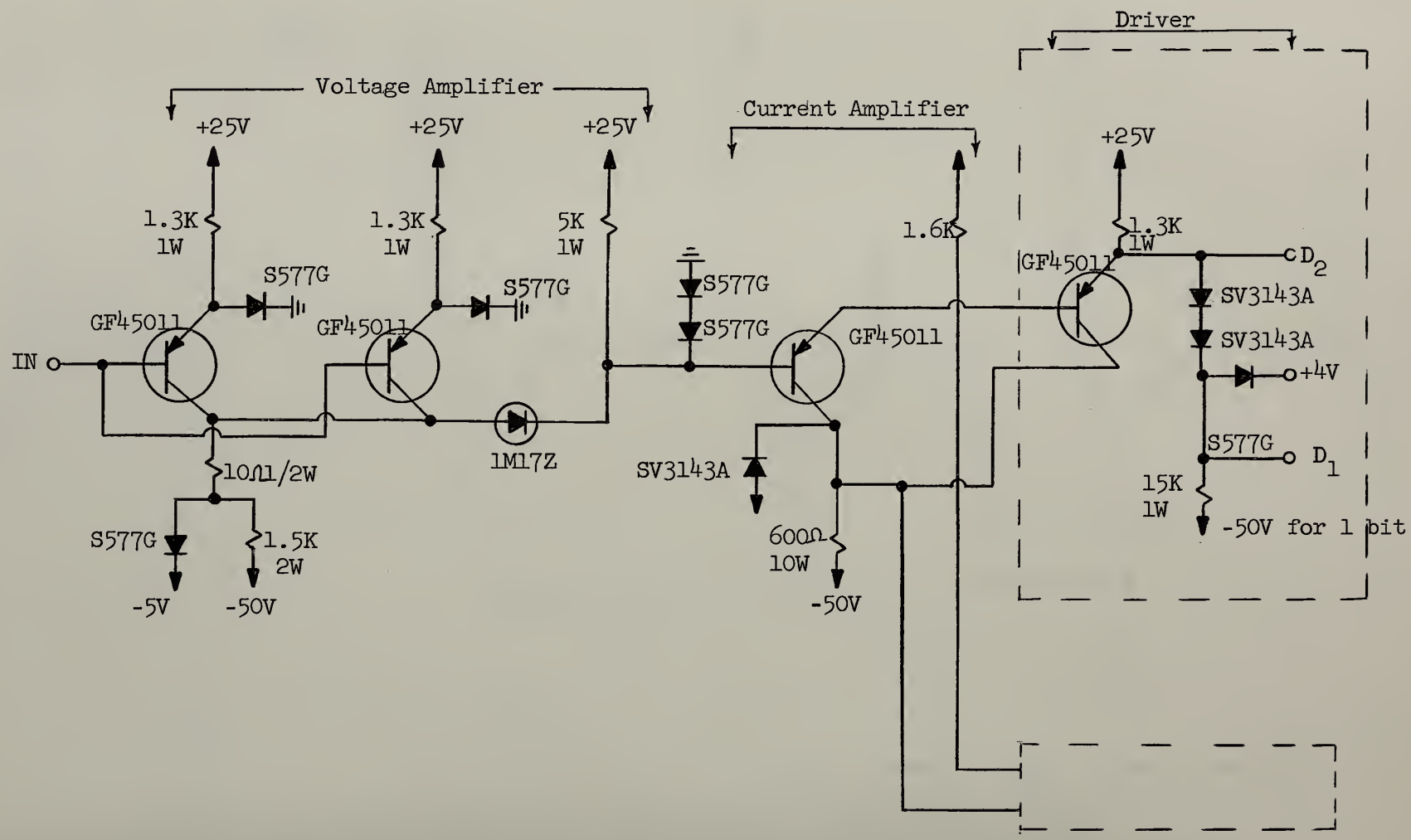

Figure 4.

Read-In Driver

The requirements for the read-in driver are shown by the table below, the notation being that of Figure 5.

At the normal state

$V_1 = 4 \pm 0.5$ v. $\qquad I_1 = 2.9 \quad 1.5$ ma

$V_2 \geq 7.1$ v. $\qquad I_2 = 0$

At the reading-in state

$V_1 \leq -3.6$ v. $\qquad I_1 = 0$

$V_2 = 0 \sim 1.0$ v. $\qquad I_2 = 0 \sim 9.4$ ma

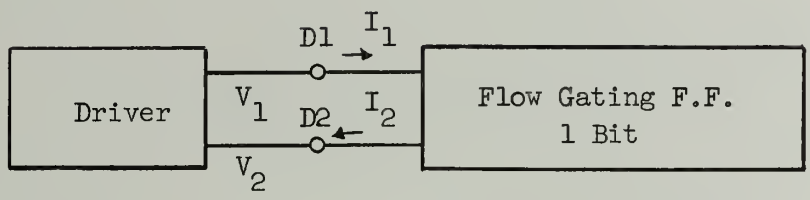

Figure 5

Voltages and Currents for the Read-in Driver

The table of switching times was composed in order to compare the performance of the flipflop with three fast drivers using the old 2N604, the fast GF45011 and finally the N100 (produced by TI for IBM and obtainable at about 1/6 th cost of the GF45011). Figure 6 shows the notation and also the waveforms which were observed.

Table of Switching Times

	t_{d1}	t_{e1}	t_{d2}	t_{t2}	t_t'	$(\Sigma t)_{max.}$
GF45011	15	15	10	20	35	75
N100	15	15	10	20	55	95
2N604	15	15	10	20	35	75

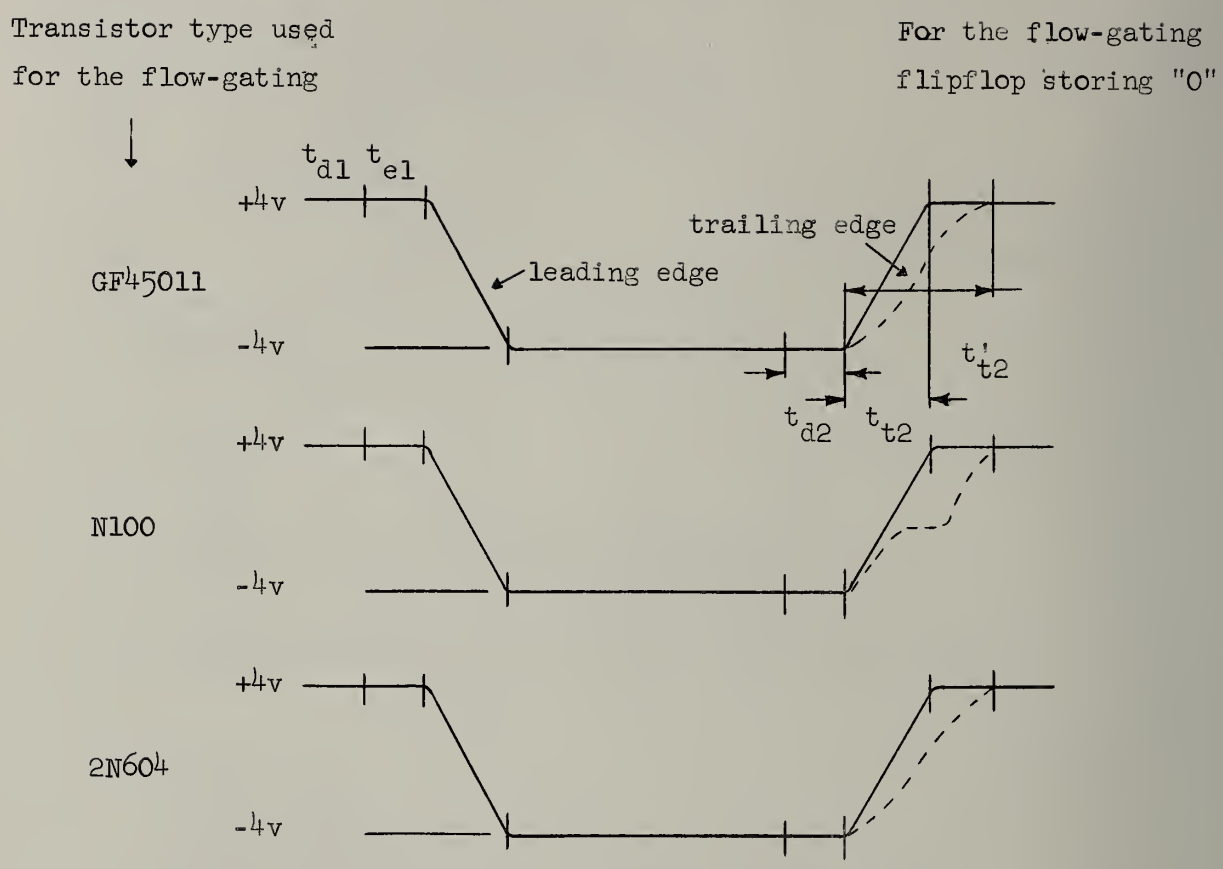

Figure 6

Waveforms at the Output of the Flowflop During the Read-in Process

It should be noted that the differences in allowed dissipation of the transistors necessitated an adjustment of the impedance level for each type. It is remarkable how little influence this adjustment had on the switching times.

4. Tunnel Diode Theory

Difficulties are encountered when the Esaki-Integral is to be set up rigourously from the principles of quantum mechanics. In particular there are some discrepancies as regards the dimensions both in Esaki's original letter

and also in the GE publication by Lesk and Holonyak. Investigation showed that two hypothesis must be introduced above and beyond the fact that tunneling current is proportional to differences in Fermi-levels, the transition probability and the product of the square roots of the energy differences $\sqrt{(E_p - E)}$ and $\sqrt{(E - E_n)}$:

(1) Tunneling only occurs between elements of volume on the same perpendicular to the junction.

(2) The depth of the regions on both sides of the junction which furnish the tunneling electrons is such that they are just sufficient to serve as buffer reservoirs.

More details will appear in a future report.

(W. J. Poppelbaum)

PART III

MATHEMATICAL METHODS

1. Singular Shock Intersection in Plane Flow (Supported in part by the National Science Foundation under Grant G9503)

A report has been written summarizing the work on the above topic. The abstract of this report follows:

When a shock wave is reflected at a wall in two-dimensional stationary hydrodynamic flow, two different configurations are observed for different angles of incidence. In one a reflected shock meets the incident shock at the wall; in the other the reflected shock meets the incident shock at a point removed from the wall, and this point is joined to the wall by the so-called Mach shock.

The first case, or regular reflection, corresponds to a shock attached to a wedge in a supersonic oncoming flow. In this case a curved reflected shock is observed if the flow behind it is subsonic. It is well known that in general there do not exist analytic curved shocks that give rise to a straight stream line. A class of singular curved shocks are exhibited which do give rise to a straight stream line, and thus satisfy the boundary conditions at the wall. The analogous solutions in pseudo-stationary flow are also exhibited.

For incident shock angles for which regular reflection is no longer theoretically possible, either regular or a three shock configuration, called Mach reflection, is observed experimentally. If the incident shock is sufficiently weak, no solutions of the algebraic Rankine-Hugoniot equations and matching conditio across the slip-stream exist. Since the methods used to introduce a singularity in regular reflection assumed the existence of solutions of the Rankine-Hugoniot equations, that method cannot be used to explain this phenomenon. The way in which viscosity modifies the Rankine-Hugoniot equations and the matching conditions across slip streams is discussed, and these results applied to the problems of regular and Mach reflection. The equations are examined in some detail for weak incident shocks and the results discussed as the viscosity tends to zero.

It appears that there may be two and three shock configurations different from the non-viscous configurations. These new configurations have the property that the angles of the shocks are independent of the viscosity to the first order in the strength of the shock.

(C. W. Gear)

2. Differential Equations (Supported in part by the Office of Naval Research under Contract Nonr-1834(27)).

A program to solve differential equations by the fourth-order scheme called "Kutta's Simpsons Rule" has been prepared for floating point arithmetic operations, using the new summation strategy discussed for the quadrature problem (November 1959 Technical Progress Report). This is now being coded for the IBM 650.

(L. Fosdick and C. Clifford)

3. Floating Point Arithmetic (Supported in part by the Office of Naval Research under Contract Nonr-1834(27)).

The results of our quadrature experiments have been examined in some detail in an attempt to formulate simple rules or theorems for estimation of the error. On difficulty in this error analyses is simply a notational one. For example the conventional notation becomes cumbersome and inadequate when one tries to express the transformation $x \rightarrow x^*$ where x is the exact representation of a number and x^* is its representation in a machine. We have found it useful to define a truncation operator T_k, which has the property that given

$$x = \sum_{i=p}^{\infty} x_i r^i$$

then

$$T_k x = \sum_{i=p}^{k} x_i r^i .$$

Some simple, almost self-evident, theorems for this operator are:

Th 1: $T_r T_s = T_s T_r = T_t$

where $t = \max(r,s)$

Th 2: $\lim_{r \rightarrow -\infty} T_r = I$

where I is the identity operator.

Th 3: $T_p x = 0$ if $|x| < r^p$

Th 4: $T_p\, r^q\, x = r^q\, T_{p-q}\, x$

Th 5: $T_p\,(x+y) = T_p\, x + T_p\, y$

$$+\, T_p\,((I-T_p)x + (I-T_p)y)$$

(T_p is not, in general, distributive over addition.)

It will be recognized that the truncation operator is simply a special kind of projection operator. The real numbers are the operands and they are regarded here as vectors in an infinite dimensional space; the $i^{\underline{th}}$ component (for the binary cases) being the coefficient of 2^i in the binary expansion of the number. From this viewpoint the operator T_p gives the projection of x onto the manifold M_p. The manifolds are ordered with respect to p in the sense that

$$M_p \subset M_{p-i} \qquad (i > 0) \ .$$

An attempt is now being made to treat the generation of errors in floating point arithmetic from this new viewpoint.

Concerning the tests described in the December 1959 Technical Progress Report on the present subject we have the following comments to make. The results of Test I are not typical but strictly fortuitous. It is fairly easy to show that the roundoff errors for successive terms in the Simpson's rule summation precisely cancel in pairs. The constant 1/7 would be a better choice for this test. Test III was repeated and the somewhat curious results presented in the December 1959 Technica Progress Report have been verified as correct. A careful examination of this case remains to be performed.

(L. D. Fosdick)

4. Monte Carlo Studies of Order-Disorder Phenomena (Supported in part by the Office of Naval Research under Contract Nonr-1834(27)).

One difficulty which presents itself in this work is the estimation of the critical point; that is, the temperature at which a singularity would appear in the infinite system. This is a difficulty for two reasons. First, the Monte Carlo model is necessarily finite and therefore has no true critical point. Second, even though the Monte Carlo model does show a behavior resembling that associated with a critical temperature, our experiments show that this behavior

is very sensitive to the size of the model. For the Ising model where, among other things, the critical point is associated with an abrupt vanishing of the long-range order we have adopted, the point at which the long-range order becomes equal to 1/2 as an estimate of the critical point. This is rationalized on the following grounds. The exact solution for a two-dimensional Ising model shows that this point differs from the true critical point by less than 0.4%; theory predicts that the three-dimensional case should show an even smaller difference. Our experiments show that this point is less sensitive to lattice size than points based on extrapolation of the long-range order, which incidentally is inevitably accompanied by subjective distateful decisions. In addition this convention provides a standard of comparison which is unambiguous, and relatively easy to compute.

(L. D. Fosdick)

PART IV

ILLIAC USE AND OPERATION

Illiac Usage

During the month of April specifications were presented for 22 new problems. This list does not indicate how the Illiac was used because large amounts of machine time may have been consumed by problems with numbers less than 1660 T. Numbers followed by T are for theses.

1660 T Psychology. An Investigation of Some Hypothesized Personality Correlates of Authoritarianism. Scale correlations have already been obtained for the two instruments - California F Scale and Allport-Vernon Study of Values. However, to further elucidate the meaning of these scale correlations, an investigation of the intercorrelations of their constituent items should be made. Illiac will facilitate this investigation.

In addition, it would be of interest to identify the factors that serve as the basis for the intercorrelations. There is the possibility that one or more factors, identifiable with the response set, would result from a factor analysis. Illiac will, likewise, make this analysis possible.

1661 Digital Computer Laboratory. Speed-Independence Analysis. A speed-independence analysis routine for asynchronous logical circuits will be developed. This routine will make use of the connection matrix method.

1662 T Agricultural Economics. Evaluation of Farm Efficiency. An evaluation of the efficiency of forty Irish farmers in terms of their economic success will be made. This efficiency will be measured as a deviation from a regression equation. Several algebraic forms of regression will be attempted. The usual least squares technique (K-14 and K-16) will be employed with the dependent variable being gross product and the seven independent (or explanatory) variables including land, labor, machinery, etc.

1663 Digital Computer Laboratory. Level Restorer Circuit. The circuit analysis routines will be used to obtain node voltages and branch currents for bleeder networks and emitter-followers of a level restorer circuit.

1664 T Theoretical and Applied Mechanics. Elastic Stability of Rings. The investigation of the stability of rings (non-homogeneous) is divided into three major sections: (a) Deformation in elastic equilibrium - the numerical solution of which requires the solution of six boundary conditions expressed as linear algebraic equations; (b) Upper bound for critical pressure - the numerical solution of which requires the evaluation of the roots of a polynomial; (c) Lower bound for critical pressure - the numerical solution of which requires the evaluation of the determinant of a square matrix of 8th order.

1665 Physical Education. Analysis of Motor Performance, Motivation and Academic Achievement in College Freshmen. The data consists of motivation components, physical fitness measurements (cardiovascular and motor) and semester grade averages for sixty-three college freshmen, the data being collected at the beginning (T_1) and end (T_2) of the semester. Two centroid analyses, rotated to an oblique simple structure solution, would serve to identify the relationships implicit in these data: (i) T_2 data alone, (ii) T_1-T_2 data. Standard library routines would be used in the analyses.

1666 State Water Survey. Morpholine, Carbon Dioxide, pH and Conductivity Relationship. In steam power plants the morpholine-carbon dioxide equilibrium or pH is of considerable importance in maintaining a corrosion-free system. Increased knowledge of this equilibrium will make the understanding of the analytical data more complete. A graph, similar to one recently published in the A.S.M.E. Power Test Codes, will be prepared from this data and published in a forthcoming article.

Equilibrium data with other alkaline chemicals and at other temperatures may also be treated.

1667 Digital Computer Laboratory. Relativistic Stars. This problem is a continuation of problem number 1501 where Einstein's equations were solved for the static spherically-symmetric case. This time the parameter, u_c, which represents the central temperature of the star, is to be taken to be very large.

1668 T Agronomy. Quantitative Genetics of Dwarf Corn. The problem involves the computation of heritable and non-heritable components of variance in dwarf corn and a breakdown of the heritable component into several parts. The variance estimates which are the vectors used in the solution of the matrices come from over 100,000 separate pieces of data. The analysis of variance affords a different method of computing the above, and affords a check on the statistical procedure used in analyzing genetic data. In essence, therefore, an attempt is being made to obtain an empirical proof of certain theories dealing with the estimation of genetic variance components.

1669 Psychology. Social and Occupational Adjustment. 16 scores per individual on 73 individuals have been obtained. A matrix of intercorrelations between the 16 scores is to be formed. This is a pilot study. The attempt is to establish the best procedures for the measurement of self percepts and perceptions of occupations. Later work on the same project will involve further correlational procedures, but the exact nature of the later work will depend on the outcome of the present study.

1670 T Mechanical Engineering. Coefficient Matrix. The problem consists of the evaluation of slowly converging infinite series of trigonometric and Bessel functions. The series arise in the solution of Laplace's equation with mixed boundary conditions, the conditions being approximately satisfied by the method of superposition of sources.

1671 Electrical Engineering. Cross Correlation. Given two functions $x(t)$ and $y(t)$, this routine will compute $R_{xy}(\tau) = \int_T x(t)\, y(t+\tau)\, dt$ by Simpson's rule integration. These functions $x(t)$, $y(t)$ will be values of <u>Satellite Signal Strength</u> taken at two different locations. The purpose of this computation is to compute the drift velocity of the diffraction pattern on the ground in order to deduce the height of the ionospheric irregularities producing it.

1672 Civil Engineering. Dynamic Analysis of Arches. This investigation is concerned with the dynamic response analysis of circular arches both in the elastic and inelastic range for two loading conditions.

(1) Uniform all-around radial pressure with triangular time distribution.

(2) Moving type pressure pulse with triangular time distribution.

For this purpose two separate routines have been developed, the procedures of which are described as follows:

(1) Arch is approximated by a mechanism of flexible bars and lumped masses. Equations of motion for each mass are set up and are solved by a step-by-step numerical integration procedure. The analysis includes both elastic and inelastic ranges of behavior.

(2) The response can be computed by the modal analysis method. Natural modes and frequencies for the arch model which have been obtained using the Library Subroutine (M-19) form the basic data required. Displacement configuration is expressed as a linear series of normal modes of free vibration, the weighting factors of each term of the series representing the participation of each mode. Equations of motion in terms of participation factors for each mode are derived. The routine adopts a step-by-step marching type procedure for the solution of these equations. Model displacements, axial forces and moments are then superposed using the participation factors and the response of the arch thus obtained. The analysis is restricted to the elastic range of behavior only.

1673 T Agronomy. Relationship of Certain Characteristics with Lodging Reaction in Ten Oat Varieties. The problem of the thesis research is to determine by analysis of variance whether or not certain histological and morphological characteristics of ten oat varieties are significantly different so that they can be used as a criterion for selecting lodging resistant and lodging susceptible types.

Analysis of variance on data taken in 1958 and 1959 will be made for the following characteristics: ch_r value, stem diameter (caliper), stem diameter (histological), length of first internode, length of second internode, inner vascular bundle number, peripheral vascular bundle number, total vascular bundle number, width of culm wall, width of sclerenchyma layer, and pith diameter.

1674 Bureau of Educational Research. Accelerated Placement. An attempt is being made to determine what common information is being utilized by teachers in selecting students for special classes - such as an accelerated class.

A matrix of 26 variables has been formed from which the nature of the factors common to all variables will be determined. The eigenvalues and their associated eigenvectors and then the principal axis factors will be determined. These factors will then be rotated to psychologically more meaningful positions with the use of KSL 1.80.

1675 T Agricultural Economics. Effects of Economic Adjustments on the Supply of Milk from Farms in Northern Illinois. This research problem involves the allocation of scarce farm resources among various alternative production activities for the maximization of farm profits. These features help make the problem conformable to linear programming methods.

Given input-output coefficients a_{ij}, cost coefficients c_j and resource restrictions b_i; x_j such that $\sum_j a_{ij} x_j = b_i$ with $x_j \geq 0$ and $\sum c_j x_j =$ maximum are to be determined.

Farms from a random sample in northeastern Illinois have been classified by acres of cropland, type of dairy facilities, number of dairy facilities, and quality of dairy cows. The average number of resources for each "homogeneous" stratum of farms defines a linear programming problem.

Each problem should be run twice -- once with dairy activities in the system and once with dairy activities excluded. This is necessary since the fixed labor requirements for the dairy enterprises must be subtracted from the resource supply before the problems including diary activities are solved. This procedure permits a declining average labor requirement per cow as additional cows are brought into the solution even though the marginal labor requirement per cow is a constant.

Each problem will be run with variable milk and hog prices. Variable price programming is needed to show the effect of changing prices on optimal farm organization.

For one general model the acres of cropland, number of stanchion facilities, number of hog facilities, and beef prices will be varied individually to show their effects on optimal farm organization at different milk prices. These results may serve as a valuable source of hypotheses about the

influence of beef prices, size of farms, and the number and type of existing facilities on the price elasticity of the supply of milk.

1676 T Chemistry. Calculation of Equilibrium Values. The research problem is the "Carbon Isotope Effect Occuring in the Photochemical Decomposition of Formic Acid Vapor". This program is designed to aid in the calculation of some of the parameters found in the experiment, more particularly, the concentration of each of the two formic acid species present in the vapor as well as the total amount of material present. This calculation is relatively straightforward, but the number of these calculations which will ultimately be done is around two to three hundred.

1677 Institute of Communications Research. Cross-Cultural Study of Congruity. The purpose of the research is to test the congruity principle in two cultural groups. One group of subjects is American; the other is Japanese. Each group was given the same test, but the Japanese group received a Japanese translation of the test given the American subjects. The instrument used was a Semantic Differential with thirty concepts and twelve scales.

In the analysis the data from each group will be factor analyzed separately, then the two factor structures will be compared.

1678 Psychology. Air Force Validation Study. As part of a validation study a system of criterion variables - mainly consisting of Aviation High School grades - will be analyzed by the centroid method of factor analysis.

A method to reduce the number of predictor variables, thereby increasing the number of degrees of freedom of the regression system, will be tried out on this material using 12 predictors and at least one criterion, probably a Regent's Examination in Chemistry.

Two alternate formulae for computing a set of weights for the predictors are:

$$B = D^{-2}\, a(a'D^{-2}\, RD^{-2} a)^{-1}\, a'D^{-2}\, r_c$$

and

$$B = R^{-1}\, a\Delta(a'R^{-1}a)^{-1}\, a'R^{-1}\, r_c \ .$$

R and a stand for correlation and centroid factor matrices respectively, r_c is a vector of validities and D and Δ are diagonal matrices. The results using these two formulae are to be compared and evaluated.

1679 T Education. A Study of the Cognitive Merit of Teachers. The ultimate aim of this investigation is to come up with an instrument measuring cognitive merit of teachers.

The criterion measure is an instrument with 96 variables administered to about 4,000 students of 139 teachers.

Correlations with these 96 variables over 139 observations will be computed and factor analyses will be done on these variables. The mean scores will be transferred to standard scores.

The questionnaire administered to teachers has 364 items. On each item the high scoring group of teachers on criterion and low scoring group will be compared and a χ^2 test will be done. The discriminating items will be picked up to include in a new inventory.

1680 Student Counseling Service. Bennett Comprehension Test Study. This is a study of the contributions which the Bennett Comprehension Test (Form CC) might make to the prediction of first semester grade point averages in engineering at the Chicago Undergraduate Division. Only library routines are involved.

1681 Chemistry. Hydrocarbon Coupling Constants. This program is to calculate coupling constants and wave functions as functions of various angles of hydrocarbon molecules. The program calculates exchange integrals and uses a variational method for calculating the ground state wave function of the molecule. Matrix elements in terms of exchange integrals are evaluated and the resultant secular equation is solved by M19, somewhat modified in order to calculate the coupling constants from the wave functions.

This program may also be used substituting exchange integral variables for angles. The program is in two parts. The first calculates final exchange integrals and matrix elements as a function of the integrals for n sets of data (n = 1, 2, ... 10). The second part uses M19 and calculates coupling constants.

Table I shows the distribution of Illiac machine time for the month of April.

TABLE I

	Hrs:Min	
Scheduled Maintenance	61:52	
Unscheduled Maintenance	16:07	
Drum Engineering	3:57	
R.A.R.	:11	
Leapfrog	6:45	
Library Development	1:55	
Demonstrations	1:44	
Classes	28:16	
		120:47

Use by Departments

Aeronautical Engineering	2:04
Agricultural Economics	9:11
Agronomy	11:06
Animal Science	7:08
Architectural Engineering	:06
Bur. of Educational Research (PH-M1839)	1:52
Bureau of Educational Research	6:30
Chemistry (NSF G7336)	1:34
Chemistry (Nonr 1834(13))	:34
Chemistry (NSF G5907)	1:10
Chemistry	41:44
Coordinated Science Lab.(DA-36-039-SC56695)	101:20
Dairy Science	:21
Digital Computer Lab.(AEC AT(11-1)415)	31:41
Digital Computer Laboratory (NSF G9503)	9:45
Digital Computer Laboratory (Nonr 1834(27))	:30
Digital Computer Laboratory	20:03
Economics (NSF G7056)	1:36
Economics	:39
Education	:13
Electrical Engineering (Nonr 1834(22))	3:12
Electrical Engineering (AF33(616)6079)	:57
Electrical Engineering (NASA-NSG 24-59)	2:35
Electrical Engineering (NSF G7421)	4:22
Electrical Engineering (IG 1955)	:41
Electrical Engineering	9:04
Geology	:15
Institute of Communications Research	2:33
Inst. for Research on Exceptional Children	:38
Mathematics	2:12
Mechanical Engineering (DA-11-022-ORD1980)	:07
Mechanical Engineering	4:53
Medicine, College of	2:36

(cont'd.)

TABLE I

Use by Departments
(cont'd.)

	Hrs:Min		
Mining and Metallurgical Eng.(TRUS AF6770)	1:13		
Mining and Metallurgical Engineering	:06		
Music	:13		
Petroleum Engineering	3:14		
Physical Education	:39		
Physics (ORD 1001)	:25		
Physics	15:50		
Psychology (Nonr 1834(11))	5:59		
Psychology (SAE 8383)	13:05		
Psychology (M-1733)	3:31		
Psychology (AF 49(638)371)	:18		
Psychology	68:13		
Sociology	:51		
State Geological Survey	1:22		
State Natural History Survey	2:47		
State Water Survey (DA-36-039-SC75055)	5:09		
State Water Survey	3:04		
Structural Research (NSF G6572)	8:48		
Structural Research (AASHO ROAD TEST)	2:18		
Structural Research (Nonr 1834(03))	4:49		
Structural Research	36:17		
Student Counseling	1:27		
Theoretical and Applied Mechanics	:02		
Veterinary Pathology and Hygiene	:08		
Zoology	2:37		
Cornell University	:19		
Eastern Illinois University	1:43		
Indiana University	:17		
		467:56	
			588:43

Error Frequency and Analysis

The machine is normally used for "engineering" and maintenance between 7 a.m. and 10:30 a.m. Since the periods between 7 a.m. and 10:30 a.m. together with certain irregular periods, such as Saturdays and Sundays, are devoted to a heterogeneous group of engineering, maintenance, and laboratory functions, it is more instructive, from an error standpoint, to look at the periods between 10:30 a.m. and 7 a.m. of the next day in order to make an observation of the error frequency in the machine. This is the actual period when the machine is designated for use, although certain engineering procedures frequently require the scheduling of extra maintenance time. With this in

mind, a summary table has been prepared using the period between 10:30 a.m. and 7 a.m. of the next day. This table lists the running time when the machine was operating, the amount of time devoted to routine engineering, the amount of time devoted to repairs because of breakdowns, and a number of failures while the machine was listed as running. Each failure was considered to have terminated a running period and was followed by a repair period in preparing this table. Since the leapfrog code is our most significant machine test, the length of time which it has been used on the machine is listed separately, together with the number of errors associated with that particular code. This information for the month is presented in Table II.

It is important to notice that, except during scheduled engineering periods, any interruption of machine time that was not planned is considered a failure in this table. In rare cases, where the failure is not known until a later time, it is possible that no repair period is associated with the failure. This over-all system has been adopted because it makes it possible for a machine user to estimate directly the probability that the machine will be "running" any instant of time and the probability of a failure during any given interval of running time.

Table III presents a summary of errors or interruptions for April.

TABLE III

Control	4
Punch	9
Reader	3
Drum	3
Scope	1
Power Line Failure	2
Drum Air Conditioner	1
Unknown	1
Total	24

TABLE II

DATE	RUNNING OK TIME	REPAIR TIME	SCHEDULED ENGINEERING	INTERRUPTIONS OR FAILURES STOPPING OK TIME	TYPES OF INTERRUPTIONS OR FAILURES CAUSING REPAIR TIME	WASTED	LEAPFROG	FAILURES STOPPING LEAPFROG
4/1/60	22:00	:00	2:00	0		0	:00	0
4/4/60	21:39	:07	2:14	1	(1) Drum error	0	:15	0
4/5/60	21:10	:02	2:48	1	(1) Punch #1 error	0	:00	0
4/6/60	20:33	:00	3:27	0		0	:00	0
4/7/60	21:04	:01	2:55	1	(1) White switch failed to operate properly	0	:00	0
4/8/60	22:28	:05	1:27	1	(1) Punch #1 punching extra 5th holes	0	:00	0
4/11/60	20:57	:12	2:51	1	(1) Punch #1 operating incorrectly	0	:25	0
4/12/60	20:47	:00	3:13	0		0	:00	0
4/13/60	20:30	:01	3:29	1	(1) Unknown	0	:00	0
4/14/60	21:12	:00	2:48	0		0	:00	0
4/15/60	20:40	:50	2:30	1	(1) Punch #1 failing	0	:00	0
4/18/60	20:07	:46	3:07	1	(1) Punch #1 punches extra 5th holes	0	:20	0
4/19/60	19:53	:48	3:19	2	(1) Punch #1 punches extra 5th holes (2) Reader J erred. Read J as N	0	:20	0
4/20/60	18:07	2:41	3:12	3	(1) Division hangup circuit - inoperative (2-3) Power line failure due to storm	0	:50	0
4/21/60	22:48	:25	:47	2	(1) Reader J erred (2) Punch #1 punches extra 1 hole	0	:13	0
4/22/60	17:34	4:15	2:11	2	(1) Rewiring division hangup circuit (2) Division hangup circuit not opera.	0	:00	0
4/25/60	20:41	:00	3:19	0		0	:20	0
4/26/60	22:17	:52	:51	3	(1) Drum failure (2) Reader G failed (3) Punch #1 failed to punch 1 holes	0	2:30	0

TABLE II (cont'd.)

DATE	RUNNING OK TIME	REPAIR TIME	SCHEDULED ENGINEERING	INTERRUPTIONS OR FAILURES STOPPING OK TIME	TYPES OF INTERRUPTIONS OR FAILURES CAUSING REPAIR TIME	WASTED	LEAPFROG	FAILURES STOPPING LEAPFROG
4/27/60	21:53	:00	2:07	0		0	:00	0
4/28/60	20:08	1:00	2:52	3	(1) Scope (2) Punch #1 failed to punch 1 holes (3) Drum air conditioner	0	:29	0
4/29/60	21:13	:55	1:52	1	(1) Drum failure	0	:00	0
TOTALS	437:41	13:00	53:19	24		0	5:42	0

PART V

IBM 650 USE AND OPERATION

New IBM 650 Codes

During the month of April one new 650 routine was added to the IBM 650 Library.

K5' - 66' Product Moment Correlations, Variance-Covariance, Means and Standard Deviations. This routine will treat a data matrix of n variables and m tests. The routine computes the mean and standard deviation for each variable. It also computes the matrix of correlations or covariances.

(S. J. Penny)

IBM 650 Usage

During the month of April specifications were presented for 9 new problems. This list does not indicate how the IBM 650 was used because large amounts of machine time may have been consumed by problems with numbers less than 95'. Numbers followed by T are for theses.

95' Digital Computer Laboratory. Solving Differential Equations by the Runge-Kutta Method Using Floating Point Arithmetic. The purpose of this work is to investigate the behavior of the error in the solution of differential equations using the Runge-Kutta method and floating point arithmetic. The particular point of emphasis in this work is the reduction of the round-off error by carefully retaining the increments to the solution for each Runge-Kutta step in a binary ladder form. The binary ladder form is obtained by summing the increments as described in Library Routine E3'.

96' Physics. Curve Fitting (Partial). The least squares best fit is applied to the expansion of the elastic scattering cross-section (π + P) in terms of Legendre Polynomials. Indicating with θ the scattering angle in

the center of mass system and with N the maximum orbital angular momentum, the expansion for the cross-section $\sigma(\theta)$ is:

$$(1) \qquad \sigma(\theta) = \sum_{L=0}^{2N} \sigma_L P_L (\cos \theta) \quad .$$

The coefficient σ_L is a bilinear combination of the scattering matrix elements of the problem.

The final aim of the calculation is to deduce from the σ_L a set of solutions for the phase-shifts.

The actual aim of this calculation is to obtain, from experimental data, the numerical values for the σ_L. The σ_L, analytically defined as:

$$(2) \qquad \sigma_L = (2L + 1) \int \sigma(\theta) P_L (\cos \theta) \, d \Omega ,$$

can be numerically calculated as:

$$(3) \qquad \sigma_L = (2L + 1) \sum_{i=1}^{M} \sigma_i P_L (\cos \theta_i) w_i \quad ,$$

where σ_i are the measured values of σ at the angle θ_i and w_i is the interval of solid angle between θ_i and θ_{i+1}. For the case of interest M = 40: the approximation implied in (3) seems therefore simple - Equation (3) results from the least squares technique applied to expansion (1).

The routine consists in the evaluation of σ_L by calculating the products $\sigma_i P_L(\theta_i)$ and accumulating them for subsequent values of θ_i. This routine starts with the evaluation of the 2N + 1 P_L needed, as from the recurrent formula

$$P_{\ell+1} = \frac{(2\ell+1) P_\ell - \ell P_{\ell-1}}{\ell + 1}$$

at point θ_i. The 2N + 1 σ_L are finally punched. The reliability of the calculation is then checked; first, a check on the "orthogonality" of the P_L is done by calculating:

$$\sum_i P_L(\theta_i) P_{L'}(\theta_i) w_i \quad .$$

Second, a check on the best fit is done by comparing to the experimental σ_i the calculated

$$\sigma(\theta_i) = \sum_L \sigma_L P_L (\theta_i) \quad .$$

The Bell interpretative routine has been used. The total number of instructions is about 200.

The work is a partial calculation of a more general one (evaluation of the phase-shifts). Due to the simplicity of the best fit in terms of Legendre Polynomials, and to the fact that from the knowledge of the σ_L it is possible to induce the "leading" angular momentum j in the phase-shift analysis, it seems useful to start with to be able to obtain from the 650 a plot of the σ_L.

97' T Psychology. Effects of Time Limits on Reasoning Measures. This routine will be used to investigate the effects of time limitations on reasoning measures. This problem involves (for each data set):

1. For each subject, compute 5 scores.
2. For each score:
   (a) compute reliability estimate

$$\alpha = \frac{n}{n-1} \left(1 - \frac{\sum pq}{V_T}\right)$$

where n = number of items in the test,
$\sum pq$ = sum of item variances,
V_T = variance of total score;

   (b) compute score mean;
   (c) compute score variance;
   (d) compute item means;
   (e) compute item variances.

98' T Agricultural Economics. Effects of Economic Adjustments on the Supply of Milk from Farms in Northeastern Illinois. This research problem involves the allocation of scarce farm resources among various alternative production activities for the maximization of farm profits. These features help make the problem conformable for linear programming methods.

Given input-output coefficients a_{ij}, cost coefficients c_j and resource restriction b_i, the goal is to determine x_j such that $\sum_j a_{ij}x_j = b_i$ and $\sum_j c_j x_j$ = maximum, with $x_j \geq 0$.

Farms from a random sample in northeastern Illinois have been classified by acres of cropland, type of dairy facilities, number of dairy facilities, and quality of dairy cows. The average number of resources for each "homogeneous" stratum of farms defines a linear programming problem.

Each problem should be run twice - once with dairy activities in the system and once with dairy activities excluded. This is necessary since the fixed labor requirements for the dairy enterprises must be subtracted from the resource supply before the problems including dairy activities are solved. This procedure permits a declining average labor requirement per cow as additional cows are brought into the solution even though the marginal labor requirement per cow is a constant.

Each problem will be run with variable milk and hog prices. Variable price programming is needed to show the effect of changing prices on optimal farm organization.

For one general model the acres of cropland, number of stanchion facilities, number of hog facilities, and beef prices will be varied individually to show their effects on optimal farm organization at different milk prices. These results may serve as a valuable source of hypotheses about the influence of beef prices, size of farms, and the number and type of existing facilities on the price elasticity of the supply of milk.

99' Institute of Labor and Industrial Relations. Executive Turnover. Product moment correlation will be computed to establish relationships between job frustrations and executive turnover. 24 job factors were measured, 3 frustration indexes on each, as well as 6 mobility indexes.

100' T Civil Engineering. Dynamic Response of Multi-Degree of Freedom Systems. This program will determine the amplification factor for dynamic response of a multi-degree of freedom system with coupled translation and rotation as compared to a base system with no coupling.

The solution will be based on the forced vibration of a large number of 3 and 6 degree-of-freedom systems. It is estimated that the 3 degree-of-freedom systems alone will involve 7,000 problems. The computer will be used to solve these.

The mathematical procedure consists of Stodola iteration of the equation of motion matrix together with the use of the quadratic equation to determine the eigenvalues and eigenvectors. Eigenvectors will be normalized, i.e.,

$$A_{ij} = X_{ij} / \sqrt{\Sigma X_{ij}^{2} M_j} .$$

The modal method of analysis will be used to determine the maximum response of each system.

$$X_i = \sum A_{ij}\, c_i\, [A.M.F.]_i$$

where:

X_{ij} = mode shapes - X_{11}, X_{12}, X_{13}; X_{21}, etc.
M_j = jth mass
A_{ij} = normalized mode shapes
X_i = response of ith coordinate
c_i = participation factor
$[A.M.F.]_i$ = amplification factor (dependent on forcing function).

101' Chemistry. Hartree-Fock Functions. The problem consists essentially of a numerical evaluation of rather complicated, analytical Hartree-Fock atomic wavefunctions expressed as sums of exponentials. This problem is a necessary prerequisite for crystal field calculations of energy levels.

102' Physics. Best Fit with Legendre Polynomials. The routine described under problem number 96' has been completed and preliminary results have been obtained for the realistic case in which the values of the function to be fitted are the experimental data related to bubble chamber events. In this case the data do not cover the whole range from x = 1 to x = -1. As a consequence, the normal equations for the best fit are of the form:

(1) $$\sigma_L = \sum_{L'} A_{L'}\, Q_{LL'}$$

where $$\sigma_L = \sum_i w_i\, f(i)\, P_L(x_i)$$

is calculated with the experimental values f(i) and the experimental weights w_i. The A_L are the unknowns, and the $Q_{LL'}$ are the elements of the symmetric matrix Q, given by:

(2) $$Q_{LL'} = \sum_i w_i\, P_L(x_i)\, P_{L'}(x_i).$$

The unknowns A_L are the coefficients of the expansion:

(3) $$\sigma(x) = \sum_L A_L\, P_L(x)$$

which will fit the experimental data.

In order to obtain the A_L the system of equations (1) is solved by using the Library Routine M1', rewritten from SOAP into Bell format. The routine M1' provides the solutions in terms of the inverse matrix Q^{-1} as:

(4) $$A_L = \sum_{L'} \sigma_{L'} Q^{-1}_{LL'} \quad .$$

Once the A_L are obtained the routine proceeds to calculate the quantity:

(5) $$S = \sum_i w_i [\sigma(x_i) - f_{(i)}]^2 \quad .$$

Finally, the errors attached to the A_L are evaluated through the diagonal elements of Q^{-1}. The curve so obtained, as

(6) $$\sigma(x) = \sum_L A_L P_L(x)$$

is eventually calculated at the points x_i corresponding to the experimental values f(i).

103' Marketing. Consumer Acceptance of Non-Woven Material. This is a questionnaire study of consumer acceptance to non-woven material, by the Marketing Research class.

104 one-column frequency distribution tables will be computed and punched for multiple tabulating.

Table I' shows the distribution of the IBM 650 machine time for the month of April.

TABLE I'

		Hrs:Min	
Regular Maintenance		15:41	
Unscheduled Maintenance		10:12	
Library Development		8:19	
Log Summation		:44	
Demonstration		1:45	
Classes		26:18	
Civil Engineering 297	2:08		
Civil Engineering 391	6:20		
Math 395	17:50		
Wasted		25:55	
			88:54

TABLE I'
(cont'd.)

Use by Departments

		Hrs:Min		
Chemistry		7:59		
Digital Computer Laboratory		1:06		
Graduate College		11:44		
Physics		4:11		
Psychology		:29		
Statistical Service Unit		90:33		
Bur. of Ed. Research	1:47			
Bur. of Inst. Res.	3:23			
Bursar's Office	21:57			
Business Office	8:36			
DHIA	38:05			
Education	4:06			
Horticulture	1:08			
ILIR	1:23			
Min. and Met. Eng.	3:52			
Psychology	2:19			
Student Counsel. Ser.	3:57			
Structural Research		:45		
Theoretical and Applied Mechanics		1:44		
			118:31	
				207:25

Error Frequency and Analysis

The IBM 650 is normally on from 8 a.m. to 5 p.m. The machine is used for preventive maintenance from 8 a.m. to 12 noon on Mondays.

Table II' gives the daily breakdown of machine time with respect to wastage and unscheduled maintenance.

Table III' presents a summary of errors for January.

TABLE III'

Tape Unit	16
533	10
407	2
Storage Unit	9
Upper Accumulator	1
TOTAL	38

TABLE II

DATE	RUNNING OK TIME	SCHEDULED ENGINEERING	REPAIR TIME	WASTED	FAILURES STOPPING OK TIME	TYPES OF FAILURES CAUSING REPAIR TIME
4/1/60	8:08			:52	1	Tape unit 2 spills tape in vacuum tubes
4/4/60	3:11	4:03		1:46	0	
4/5/60	15:06		:05	:16	2	(1) Tape unit 3 didn't recognize load point (2) Card jam in 533 read
4/6/60	13:54			:11	1	Tape unit 1 threw tape toward inside
4/7/60	8:26		:18	:21	3	(1) Tape reading error due to damaged tape (2-3) 533 fuse blew
4/8/60	8:49			:13	1	Tape unit 2 dumped tape into vacuum tubes
4/11/60	2:47	3:59	2:02	:12	1	533 blew 3 fuses
4/12/60	6:06			2:54	2	(1-2) Tape held too tight on tape unit 3
4/13/60	6:38		1:42	:40	3	(1) Card jam in 533 read (2-3) 533 blew 2 fuses
4/14/60	6:23		1:03	1:34	3	(1) Card jam in 533 punch (2) Tape unit 2 threw tape off track (3) Tape unit 3 mangled tape
4/15/60	9:01			:05	0	
4/18/60	6:18			2:42	0	
4/19/60	5:09	3:41		:10	0	
4/20/60	6:51		:21	1:48	2	(1-2) Bad cam found in 407 on-line
4/21/60	7:09		2:10	:53	2	(1) Bad tube in chassie 23 of control unit (2) Unit 3 would not rewind
4/22/60	7:22			1:38	1	Col. 38 read as a blank but it had 8 punched in it
4/25/60	1:37	3:58	1:15	2:10	3	(1-3) Index registers not working properly
4/26/60	7:20			2:58	1	Bad condenser found in unit 2
4/27/60	6:40			2:30	2	(1) Double bit on position 10 of U.A. (2) Had storage unit light

TABLE II' (cont'd.)

DATE	RUNNING OK TIME	SCHEDULED ENGINEERING	REPAIR TIME	WASTED	FAILURES STOPPING OK TIME	TYPES OF FAILURES CAUSING REPAIR TIME
4/28/60	11:27		1:16	:17	8	(1) Tape unit 3 twisted tape (2) Tape written last week on unit 3 wouldn't read properly (3-7) Storage unit lights when no error occured (8) Hung up on 068010 for no apparent reason
4/29/60	7:15			1:45	2	(1) Tape unit 3 wouldn't recognize load point (2) 533 stops on read order for no apparent reason
TOTALS	155:37	15:41	10:12	25:55	38	

PART VI

GENERAL LABORATORY INFORMATION

Seminars

"Numerical Method for the Detached Shock Problem at the Sonic Line", by Professor P. R. Garabedian, Institute of Mathematical Sciences, New York University, April 4, 1960.

"Some Remarks on the Stability Theory of Numerical Integration", by Professor H. S. Wilf, Mathematics Department, University of Illinois, April 11, 1960.

"SALT: The Statistical Analysis Library, Tape, for the IBM 650", by Mr. Samuel Penny, Digital Computer Laboratory, University of Illinois, April 25, 1960

Reports

Report No. 98, "Computation of Order Parameters in an Ising Lattice by the Monte Carlo Method", by J. R. Ehrman, L. D. Fosdick and D. C. Handscomb, April 15, 1960

Personnel

The number of people associated with the laboratory in various capacities is given in the following table:

	Full-Time	Part-Time	Full-Time Equivalent
Faculty	9	2	10.5
Research Associates	1	-	1.0
Graduate Res. and Teaching Assts.	5	34	22.4
Graduate Fellows	2	-	2.0
Administrative and Clerical	5	-	5.0
Other Nonacademic Employees	28	4	29.5
Totals	50	40	70.4

The Laboratory Advisory Committee consists of Professors H. C. Brearley, L. D. Fosdick, D. B. Gillies, B. H. McCormick, G. A. Metze, D. E. Muller, T. A. Murrell, W. J. Poppelbaum, J. E. Robertson, and J. N. Snyder.

Physics

UNIVERSITY OF ILLINOIS
GRADUATE COLLEGE
DIGITAL COMPUTER LABORATORY

TECHNICAL PROGRESS REPORT

PART I - HIGH-SPEED COMPUTER PROGRAM
PART II - CIRCUIT RESEARCH PROGRAM
PART III - SWITCHING CIRCUIT THEORY
PART IV - ILLIAC USE AND OPERATION
PART V - IBM 650 USE AND OPERATION
PART VI - GENERAL LABORATORY INFORMATION

May, 1960

PART I

HIGH-SPEED COMPUTER PROGRAM

This work is supported in part by Contract No. AT(11-1)415 of the Atomic Energy Commission and in part by the University of Illinois. Contract No. AT(11-1)415 is supported jointly by the Atomic Energy Commission and the Office of Naval Research.

1. Logical Design

The end connections in the $A_{LO}Q_{HI}$ section of the accumulator were revised to agree with recent changes in MAU definition. A simultaneous study of instruction sequences and end connections is in process to insure provisions for all operations.

(R. R. Shively)

2. Circuits

Continuation of the overcurrent tests on the not circuit has resulted in the following conclusions. Shading the design of the bleeder chain to furnish excess current to pull the base of an output emitter follower up faster at the expense of having less current to pull down gives no appreciable decrease in the risetime of the output waveform. With a 25μμf. capacitive load on the output of the emitter follower the decrease in output risetime from the case of a nominal bleeder chain to one shaded to just barely bump in the negative direction in order to use all its resources to pull positive was on the order of 3mμs. For smaller capacitive loads the difference is even smaller.

A further test of the effect the bleeder chain has on the speed of a not circuit was performed by loading the emitter follower outputs of 5 NOT circuits connected in a racing register with 20μμf. of capacity to ground, and a 5.1 k. resistor to +25v. to simulate a D.C. load. The resistors in the bleeder chain which are connected to +25v. were then varied to shade the ability of the bleeder chains to pull positive better than negative and then vice-versa. These tests seem to indicate that the value of 3.9k. presently being used for the resistor in question in the bleeder chain is the value which provides close to the least cycle time for the racing register — i.e. the least operation time for a NOT circuit -- which it is possible to obtain by varying only that resistor.

The data calculated using Sir Kittsolver No. 8 on the standard switching amplifier was plotted and is presented in File Number 318.

(J. L. Muerle)

3. Test Unit No. 2

The number of chassis operating in the test unit has been increased bringing the total to 11 four-bit chassis and 3 driver chassis. Satisfactory operation of the register with all of these units was obtained using both the clock control and the speed independent (spin) control. A sequence of four shifts (UP, DOWN-LEFT, UP, DOWN-RIGHT) requires about 300 mμsec. using the clock control (average shift time of 75 mμsec.) whereas about 600 mμsec. was required when the spin control was used (average shift time of 150 mμsec.). These average shift times were obtained by shifting a single one or zero around the register and measuring the time to circle the register, that is, complete 176 shifts. The distribution of ones and zeros in the register makes no perceptible change in the average shift times.

Both controls produce slightly nonsymmetrical gating pulses. As a result even though the average shift time for the clock control was 75 mμsec. the minimum shift time was about 60 mμsec. and in the spin control the shortest gate was 90 mμsec. compared with an average of 150 mμsec. In all cases the length of a gate pulse is defined as the time between the instant when the voltage at the base of the gating transistor becomes more positive than +0.6v. and the instant this same voltage falls below -0.6v.

Extended runs have been made using both controls and in each case error free operation of the register was obtained. Satisfactory operation with the clock control indicates that a gate time of 60 mμsec. is apparently adequate time to allow for an F-element to set. Some limited runs have been made with a minimum gate time of 45 - 50 mμsec. thus indicating that the absolute minimum time required to set an F-element is probably between 45 and 60 mμsec.

(R. E. Swartwout)

4. Core Storage Unit

Construction of the 64-word memory test unit is about 75 per cent complete.

One of the core matrices being fabricated by Telemeter Magnetics was received. The incremental inductance of the magnetic switch wiring is about 16% greater than the corresponding wiring of the matrix used in previous tests and

appears to be due to the looser wiring of the switches. This matrix will be incorporated in the memory test unit.

Recalculation of memory circuit designs is continuing.

(S. R. Ray)

The operation of the timers on the timer chassis in the memory test unit was checked. The timer circuit drawings were revised to conform with the new basic circuits.

(J. D. Leslie)

5. Input-Output and Auxiliary Storage

Multiple channel transverse dropout tests were continued using a new roll of Ampex C-1 tape. For four adjacent channels recorded at 466 bpi, and at 150 in/sec, the multiple channel dropout rate was very low. Out of 31 complete passes of 2500 feet of tape, 27 passes had no multiple dropouts at all, and 4 passes had one each. Single channel dropouts varied from 0 to 20 per pass, averaging about two per pass. These dropout rates are very much smaller than those obtained using C-1 tape before the pack slip problem was solved.

(C. N. Liu and T. C. Piper)

The equipment which will be used to control the FR300 while testing has been completed and is in the process of being checked out.

(L. J. Peek, Jr.)

Work continued on the low-frequency clock pulse generator for testing FR300 program restrictions.

(R. L. Cummins)

PART II

CIRCUIT RESEARCH PROGRAM

(Supported in part by the Office of Naval Research under Contract Nonr-1834(15).)

1. Summary

The work in May followed four lines:

a) Some more work was done on the high-power drivers discussed in the Technical Progress Report of December 1959. (J. Bauer)

b) A symmetric tunnel-diode flipflop and a counter were developed which do not use emitter-followers as unilateralization elements. (T. Kunihiro)

c) A flipflop of the flow-gating variety was designed which can be used for both GF45011 and N100 transistors. (H. Guckel)

d) Preliminary investigations were carried out for the design of a low impedance two wire system using 2000 mc transistors.

2. High Power Drivers

The decision was made to search for a transistor with a high alpha, high alpha cutoff frequency (not lower than 50 mc), and high current output, to replace the GF45011 in the 250 base driver. The only transistor available at this time is the Philco 2N1494 which has a maximum current rating of 500 m.a. and a dissipation rating of 200 m.w. at 25°c.

Some time ago three of these transistors were placed in an "F" element to serve as a speed test against the GF45011. It was decided that the Philco units were slower than the GF45011's due to a higher collector capacitance. One of these units was tested under conditions similar to the final stage of the 250 base driver, with a current of 50 m.a., which is approximately twice the present value through each GF45011 in the final stage. The input to the transistor had a rise time of 20 mμsec. due to scope limitations. The output (collector) had a rise time of 20 mμsec. also, consequently the transistor

risetime was not fully evaluated under driver conditions. Some experiments will be conducted using the Tektronix 585 scope, which has a rise time of 3.5 mμsec. Appearances would indicate that the application is such that a large collector capacitance would not be detrimental to the 250 base drivers operation.

3. Tunnel Diode Circuitry

Alongside with the theory (see last report) the experimental work was pushed in an effort to design circuits which do not depend on emitter-followers for their directivity properties. Figure 1 shows a counter based on the property that a symmetric signal (with a suitable bias) applied to a twin only triggers for one direction of change of the input. This can be seen easily by drawing the characteristic of the twin. Figure 2 shows the waveforms which are observed.

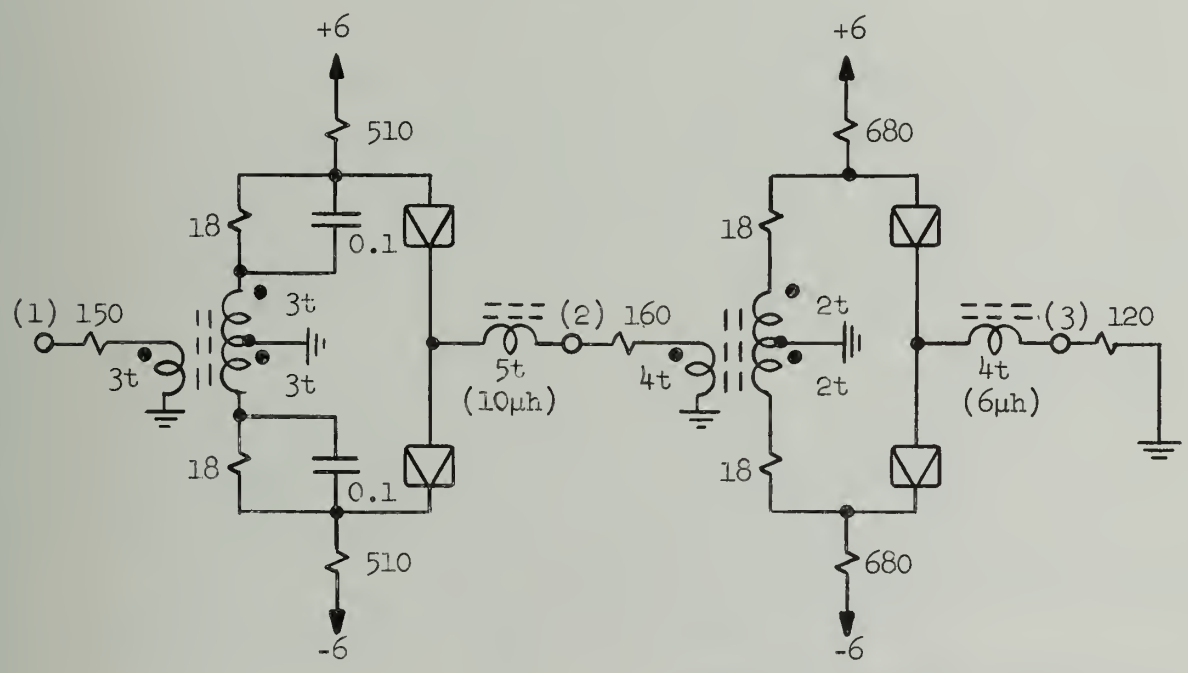

Figure 1
Counter Circuit (Using Germanium Diodes)

Waveforms at (1), (2) and (3):

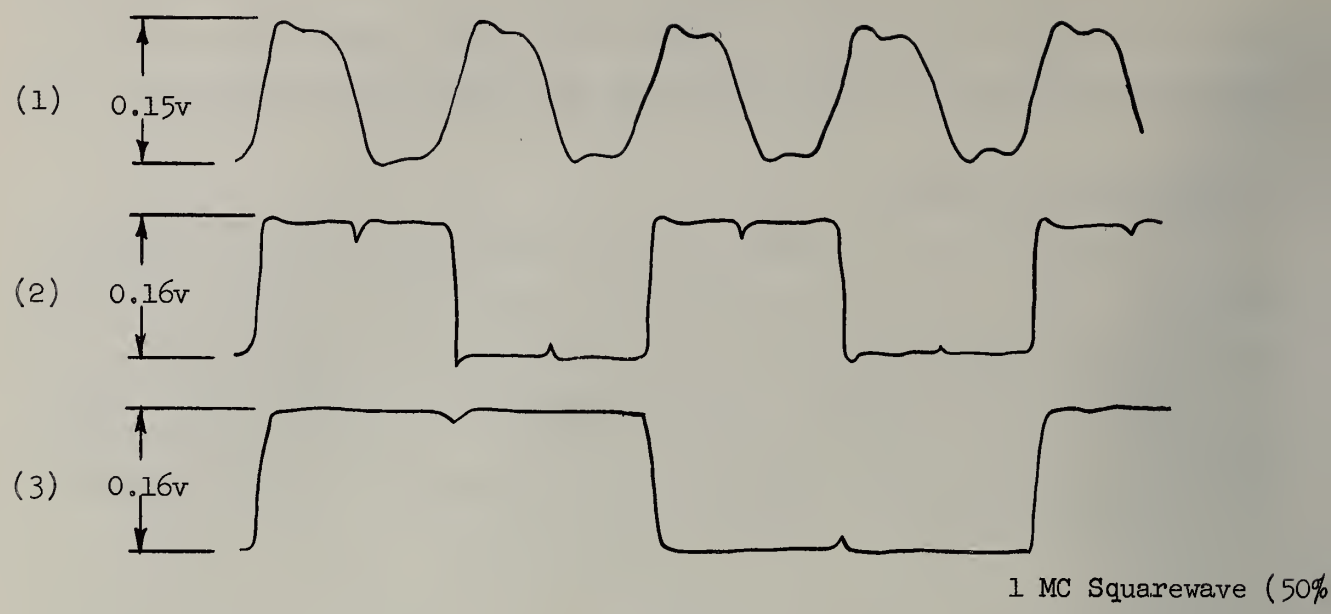

Figure 2

Waveforms in the Counter

Figure 3 shows a symmetric flipflop built out of two inverting twins. The gating current was about 3 m.a. and was deemed too high. The sensitivity of this circuit depends very critically on how closely the diode pairs are matched and on the third nonlinear term in the negative resistance region of the pair. The circuit used Ge diodes rather than GaAs which were difficult to match.

4. Flow-Gating

As was mentioned in the last report, the impedance level of the flow-flops depended on the type of transistor used. Figure 4 shows a "compatible" design using the same circuit values both for the N100 and the GF45011. The notation (D_1 D_2 D_3) is that of the previous report.

5. Low Impedance Two Wire System

Since 2000 mc. transistors seem to be available in small quantities, it was though useful to investigate the possibility of a very small swing low impedance transistor system. Figure 5 shows an AND-NOT (positive logic), which

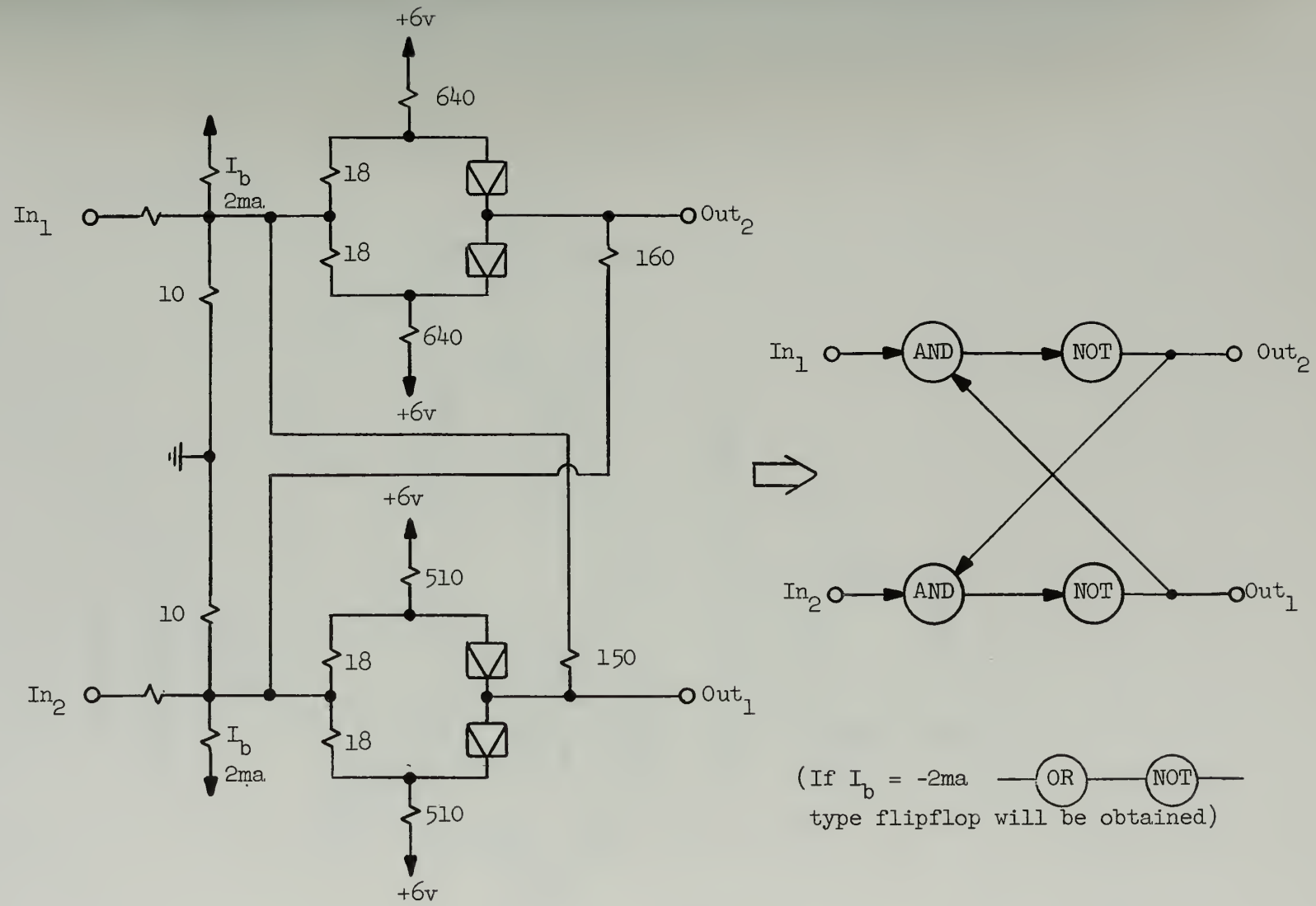

Figure 3

Symmetric Tunnel Diode Flipflop

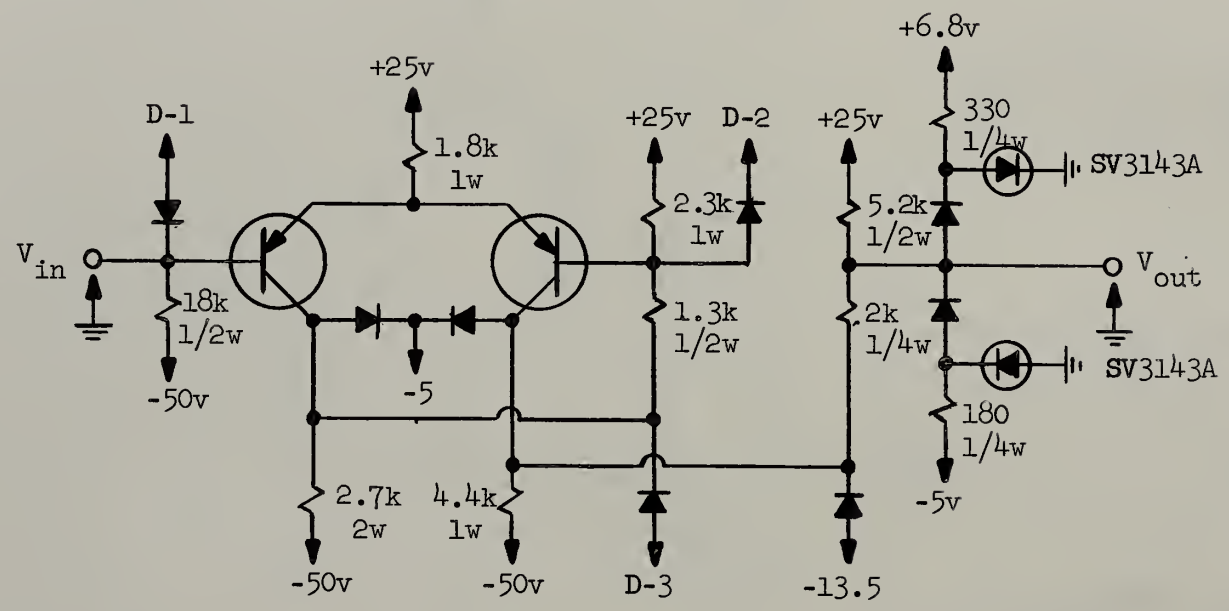

Figure 4

Compatible Flowflop

Specifications:

1. Transistors: GF45011 $\alpha \geq .93$, Curves of March 4, 1960
2. Diodes: S-577G, Curves of March 4, 1960
3. Stabistors: SV3143A, Curves Fig. 29 and 23 of File No. 314, April 15, 1960
4. Resistors: $\pm$ 3%
5. Power Supplies: $\pm$ 3%

can be transformed into a flipflop by the usual methods. It might be interesting to note that flowflops could be used in this system. The advantages of such circuitry are:

a) low output impedance that can be matched to twisted pairs or strip lines,

b) independence of ground noise, since all signals are transmitted along wires which are closely together and are <u>not</u> referred to ground,

c) very low swings and therefore small time delays,

d) input coupling by stabistors, which give a relatively small voltage drift with the bias current i_0.

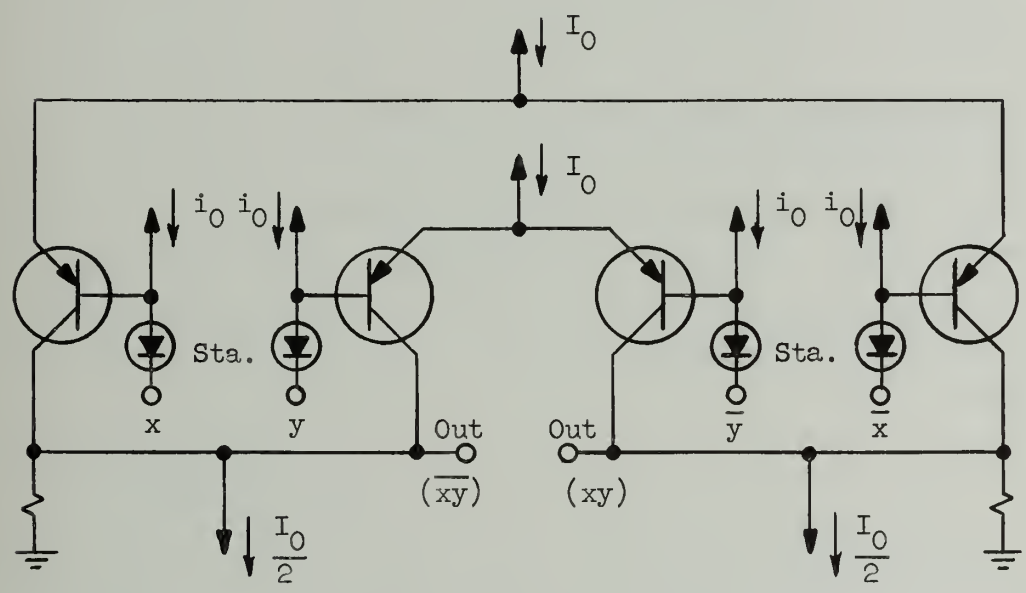

Figure 5

Low Impedance Two Wire AND-NOT

(W. J. Poppelbaum)

PART III

SWITCHING CIRCUIT THEORY

Work on error-correcting codes which correct adjacent bits in a message was described in the November 1959 Progress Report. This work was continued by using the ILLIAC to determine whether given $P_1(x)$, $P_2(x)$ pairs give rise to maximum efficiency codes of the type described in the November Report.

It was shown that the polynomial $P_2(x)$ need not be irreducible in order for the pair $P_1(x)$, $P_2(x)$ to generate a code. Instead, the requirement

$$x^{2^{m-k}-1} \equiv 1 \pmod{P_2(x)} \tag{1}$$

is a necessary requirement for $P_2(x)$ to satisfy x.

By use of the computer, two new error correcting codes with $P_2(x)$ of degree 2 and $P_1(x)$ of degree 6 were discovered. These correct single, double, and triple errors in a 63 bit message using 8 check bits. This corresponds to the rule (6) for maximum efficiency given in the November Report.

A search was made for quadruple error correcting codes of maximum efficiency having 63 bits. This corresponds to the case in which $P_2(x)$ is of degree 3 and $P_1(x)$ is of degree 6. All primitive polynomials of degree 6 were paired with polynomials P_2 of degree 3 satisfying (1). Since no such codes were formed, it is possible to assert that no maximum efficiency quadruple error correcting codes of 63 bits exist.

(D. E. Muller)

PART IV

ILLIAC USE AND OPERATION

New Illiac Codes

During the month of May one routine was revised and one new routine was added to the Illiac Library.

M15 - 183 (Revised) — Williams Memory Routine for Linear Programming by the Simplex Method (SADOI or DOI). This revision was made in order to provide the routine with a more adequate description of the procedures used in the input formats so that it can be more conveniently used.

(L. Isaacson — revised by R. Hacker)

V11 - 294 (Aux.) — Modified Bessel Functions (SADOI Only). This routine computes the two solutions of the modified Bessel equation for both zeroth and first order.

(M. Harding)

Illiac Routines in Progress

(1) A series of five linear programming routines based upon M15-183 is being prepared. These provide for a variable resource and for a variable constraint. In addition, all of these routines have been modified so as to use the drum thereby increasing the size of the problem which may be attacked.

(2) An exponential routine which allows the argument to be scaled in order to achieve greater accuracy is being prepared.

(3) A series of routines for solving linear algebraic equations is being checked and written up. These routines are based upon the iterative procedures described in Report No. 85 by Dr. Gene H. Golub, entitled "The Use of Chebyshev Matrix Polynomials in the Iterative Solution of Linear Equations Compared to the Method of Successive Overrelaxation".

(4) Several routines are being added to the Statistical Library:

A. Multiplication of a matrix by its transpose.

B. Matrix normalization.

C. A routine for automatizing the subjective coordinate transformations in factor analysis. In the past the attempt to achieve simple structure has been carried out using the oscilloscope in order to visually observe the factor structure followed by a subjectively chosen transformation in order to more nearly approach the desired simple structure. This procedure was iterated at the cost of a large expenditure of input-output and examination time.

Illiac Usage

During the month of May specifications were presented for 24 new problems. This list does not indicate how the Illiac was used because large amounts of machine time may have been consumed by problems with numbers less than 1682. Numbers followed by T are for theses.

1682 Chemistry. Overlap Integrals. The problem is the investigation of the overlap between atomic orbitals centered on adjacent atoms. The mathematics of this involves a two-dimensional integration. A straight-forward Simpson's rule method will be used. Radial parts of the wave functions have been obtained for a previous problem and will thus be available in tabulated form. Computation of the integrand is therefore very simple.

1683 Digital Computer Laboratory. Burst Correcting Codes. This program will input two irreducible polynomials, P_1 and P_2 in **X**, with coefficients interpreted mod 2. It will form $P = P_1P_2$ and then generate all residues mod P of polynomials of the form x^rK, where r varies from 0 to $2^m - 2$ and K is allowed to vary over all polynomials of degree k. Here m is the degree of P_1 and k of P_2. The program will test for congruence mod P between all pairs of the form x^rK. If no such congruence occurs, then a k + 1 burst correcting code will have been generated from P_1 and P_2.

1684 Psychology. Color Space. The problem is to generate a color space with a metric such that the colors (vectors) have certain invariant properties under transformations, i.e. to generate a color space with fixed coordinates. The data at hand allow a least-squares solution for the problem. The step prior to the final one, i.e. determining the vectors to be used as coordinates, involves finding the inverse of a 6 x 6 matrix.

1685 Mechanical Engineering. Finding the Correct Base Pressure and Temperature Solution by Interpolation or Extrapolation. In the calculation of the base pressure and base temperature problem (pertaining to the jet-slipstream interaction), base pressure (r) and temperature (s) are usually assumed and a pair of mass and energy defect numbers (λ, H) are computed. The correct solution to the problem is the pair of values of r and s such that the mass and energy defect numbers are zero ($\lambda = 0$, $H = 0$).

It is intended to develop a program for the Illiac that for given sets (e.g. 4 sets) of (r, s, λ, H), the resulting values of r, s can be found from the intersection of two lines ($\lambda = 0$, $H = 0$) which are the adequate representations of the data interpolated or extrapolated from the available information.

1686T Education. Factor Analysis and Correlation — Self-perception, Attitudes, and Use of Test Results. This problem involves inter-item correlations for two questionnaires, a self-perception check list of 24 items and an instrument on educational viewpoints of 28 items. Factor analyses of intercorrelations for self-perceptions and intercorrelations for educational viewpoints will be carried out.

1687T Electrical Engineering. Self-Adaptive Control Systems. A self-adaptive control system is one that measures, evaluates and adjusts itself to compensate for changes in the transfer function of the process or aircraft brought about by changes in the environment. A modification of the model reference system is proposed to handle high order systems in an organized manner.

Illiac will be used to calculate the impulse response (inverse Fourier transform of the transfer function) of the system and to evaluate these responses to obtain error criteria. A minimization will be performed to obtain a sharp impulse response to be used as a reference. The magnitude and phase of a few

of the transfer functions will be calculated as a function of ω. Calculations will also be made to obtain root locus plots for various parameters.

The following procedure is used to obtain the impulse response: The poles and zeros of the transfer function are input as complex numbers and a partial fraction expansion is performed using A5. The poles and residues are then searched to find the appropriate scaling factor; they are then scaled and the program goes into fixed point. The impulse response is obtained by summing the inverse Fourier transforms of the individual terms in the partial fraction expansion. This method avoids the infinite limits used in taking the inverse transform. The impulse response is plotted on the scope and a choice of a sexadecimal output for later error calculations is available.

1688 Institute for Research on Exceptional Children. Parents' Marital Integration and Child's Perception of Parents' Dissatisfaction with Social Behavior. The relationship between three components of the marital integration index for husband and wife and each of three dependent variables relating to a child's perception of dissatisfaction of both father and mother with the child's behavior will be submitted to multiple correlation analysis.

The sample consists of one hundred and six children of ages eleven to sixteen inclusive (fifty-one male, fifty-five female). Illiac routine K-16 will be used to obtain multiple r's between components of marital integration and each dependent variable for boys only, girls only, and boys and girls combined.

1689T Psychology. Measurement of the Process-Reactive Dimension in Schizophrenia by Means of the Holtzman Ink Blot Test. This research was designed to offer further evidence of a previously demonstrated relationship between severity of schizophrenia and the motivity, or genetic level of projective test responses. Thirty-four variables taken from ink blot test scores and case history data of thirty-six hospitalized schizophrenics were obtained in order to test the hypothesis that a negative correlation exists between genetic level and prognosis (severity). Illiac is to be used in computing multiple correlation statistics on the data.

1690 Electrical Engineering. Interference Error Characteristic. The error in a two-element phase-comparison interferometer in the presence of two incident

signals is

$$E = \left\{ \tan^{-1} \left[\frac{\sin A + h \sin (\gamma + B)}{\cos A + h \cos (\gamma + B)} \right] - \tan^{-1} \left[\frac{-\sin A + h \sin (\gamma - B)}{\cos A + h \cos (\gamma - B)} \right] \right\} - 2A$$

where

$$A = \frac{\pi D}{\lambda} \cos \alpha \sin \theta ,$$

$$B = \frac{\pi D}{\lambda} \cos (\alpha + \delta) \sin (\theta + \epsilon) ,$$

$$D = 2\lambda ,$$

$$h = 0.5 ,$$

and

θ, ϵ, γ, α, and δ are variable angles.

The error function is to be computed as a function of the independent variable γ, with the other quantities as parameters.

1691T Education. School-Student Variables and Academic Achievement in College. This is a "prediction of academic success" type of study. Illiac will be used to compute matrices of correlations, means, standard deviations, etc., on several variables using various groups of students. After inspecting these correlations, certain combinations of variables will be chosen and multiple correlations and regression equations will be computed. These results will determine whether partial correlations or analyses of covariance will be desired.

After the best prediction equations have been obtained, they will be cross-validated on another group of students.

1692 Digital Computer Laboratory. Main Arithmetic Unit Circuits. The circuit analysis routines are to be used to solve a series of electronic circuit problems. These problems are in conjunction with the circuits being designed for the Illiac II computer. In particular, the circuits are a part of the main arithmetic unit.

1693 Marketing. Study of Consumption Expenditures. This research is concerned with a study of three sets of variables — family characteristics, family expenditures, and personality traits of the wife.

The computations are first to compute a simple correlation relationship of the forty variables (three types).

Next the factors which are present in the matrix are to be extended to see what degrees of relationship exist in the factor patterns.

Rotations will be made to oblique axes to add further interpretation only if there emerge factors which point to relationships which are established firmly enough to identify as factors.

This study is a part of a series which have been conducted over a period of time in order to test a factor theory involving consumer behavior.

1694T Coordinated Science Laboratory. Identification of Linear Systems. The impulse response of a linear system is to be measured while the system is in normal operation by injecting a low-level test signal and cross-correlating the output of the system with the test signal. Cross-correlation is accomplished by using as the test signal the time reverse of the impulse response of a network whose transfer function is constant over the passband of the system being measured.

The computer will be used to simulate the measurement scheme. The various impulse responses involved will be either calculated or read in as sexadecimal information. The machine will proceed to solve the various convolution integrals necessary to determine both the output of the system and the measurement filter.

1695 Civil Engineering. Influence Coefficients for a Girder Highway Bridge. The problem involves the evaluation of the effects of a variation of governing parameters for a girder type highway bridge on the distribution of load to the supporting girders.

Solutions for combinations of parameters will be obtained which heretofore have been obtained only by much tedious calculation.

The program to be used for the problem solutions has already been developed previously. The method is a modified energy procedure which expresses the deflections as a series of contributing functions.

With this method standard matrix solutions are employed to obtain each term of the series.

1696T Economics. Empirical Determination of Full Employment. The main problem is the determination of the full employment level of the United States. An econometric model of the employment and price sectors of the American economy has been constructed. Using data from the U. S. economy from 1929 to 1958 excluding the period 1942-1945, the coefficients of the variables and the standard errors will be determined.

The procedure involves the use of K8 to determine the variance-covariance matrix from the basic data.

The triangular covariance matrix then becomes the data tape for determination of the coefficients using two previously developed programs. One is a limited information, single equation solution involving matrix multiplication and inversion. The other is a two stage least squares (Thiel-Basmann generalized least squares procedure) also involving matrix multiplication and inversion.

1697 Purdue University, Psychology. Olfactory Research. The data to be analyzed were derived from an olfactory research project currently supported by the National Institute of Health (B-1950). This consists of a 50 x 50 correlation matrix to be used for a principal components factor analysis and rotation which should represent a real basic contribution to the understanding of the olfactory process. Illiac will be used to do a factor analysis and rotation both orthogonally and obliquely.

1698 Theoretical and Applied Mechanics. Solution of Ballistic Equations. This problem involves the solution of a set of twelve first order ordinary differential equations describing the burning motion of a free flight rocket for arbitrary initial conditions.

1699T Psychology. A Proverb Scale for Clinical and Experimental Use: Further Investigation of the Process-Reactive Dimension in Schizophrenia. The problem involves the construction of a proverb scale for use in measuring abstract deficit in schizophrenia. An <u>item analysis</u> is involved; each of thirty-eight proverbs to be correlated with the criterion measure.

Program K8 will be used and intercorrelations of items, criterion, and vocabulary scores examined before further computation is decided upon.

1700 Digital Computer Laboratory. Wave Function for Lithium Metal. This routine will be used to find the wave function for Lithium metal by a numerical integration of the appropriate Schrödenger's equation outward from r = 0 where the boundary conditions are specified. The resulting wave function will be used in a Wegner-Seitz calculation of the cohesive energy of Lithium.

1701 Electrical Engineering. Isotropic Ray Tracing. This problem is a modification of problem number 1609. It consists of the tracing of a ray

disregarding the earth's magnetic field. The method of integration has been described in problem specification number 1609.

In this particular application the purpose is to study the behavior of a communication between Stanford, California and London, England through a polar zone in order to check a possible theory.

The particularity of this problem is that the looked-for ray will be a many-hop-ray. This requires the use of the routine F5 so that in the descending part of the ray, F5 can take over and integrate until it reaches the surface of the earth.

1702 Agricultural Economics. Comparison of Farm Management Association Records with Census Data. Approximately 5,000 farmers keep records in Farm Management Associations. The detail available in these records make them useful for research purposes of a certain nature. A central problem in most of their uses is: how representative are these farmers with respect to the population of farmers as a group. In this particular problem the predictive accuracy of the Association sample in predicting trends in those farm characteristics available in the census will be tested. Simple regressions will be run in the logarithms of the variables of census characteristic vs. sample characteristic. A regression coefficient of 1.0 will indicate "perfect" prediction. It is anticipated that two areas will be used: one in northern Illinois and one in southern Illinois. The following characteristics will be tested for their representativeness (in terms of year-to-year change):

		Farm Management Assn.	Census
1.	Farm Size	x_1	y_1
2.	Corn Acres	x_2	y_2
3.	Corn Production	x_3	y_3
4.	Number of Litters	x_4	y_4
5.	Dairy Cattle Number	x_5	y_5
6.	Feeder Cattle Number	x_6	y_6

The following form of regression equation will be fitted:

$$y_i = a\, x_i^{\,b} \quad .$$

The size of b will indicate the predictive value in terms of percentage changes (year-to-year).

1703 Horticulture. Sweet Corn Variety Testing. 1959 Sweet Corn Variety Trials at two locations are to be analyzed for ten different characteristics (including yield and quality measurements). The results of two years of sweet corn trials will be processed.

1704 Agricultural Engineering. Paint Performance. Analysis of variance will be used to determine differences between forty paints observed over a ten year period.

1705T Sociology. Factor Analysis of Nurses' Attitudes. An attempt will be made to discover the basic factor structure of 107 attitude items given to a sample of nurses. The purpose of the study is to find out the attitudes of nurses toward the professional nursing organization, the American Nurses Association.

Table I shows the distribution of Illiac machine time for the month of May.

TABLE I

	Hrs:Min	
Scheduled Maintenance	59:23	
Unscheduled Maintenance	13:44	
Drum Engineering	6:33	
R.A.R.	1:18	
Leapfrog	6:40	
Wasted	:03	
Library Development	6:33	
Demonstrations	2:48	
Classes	9:23	
		106:25

Use by Departments

Aeronautical Engineering	1:17
Agricultural Economics	25:22
Agronomy	10:30
Animal Science	4:15
Bureau of Educational Res. (PH-M1839)	3:05
Bureau of Educational Research	6:49
Chemistry (NSF G-7336)	5:21
Chemistry (Nonr 1834(13))	:08
Chemistry (NSF G-5907)	1:46
Chemistry	28:03

(cont'd.)

TABLE I
(cont'd.)

Use by Departments

	Hrs:Min	
Coordinated Science Lab. (DA-36-039-SC56695)	111:55	
Dairy Science	:06	
Digital Computer Lab. (AEC AT(11-1)415)	26:26	
Digital Computer Lab. (NSF G9503)	4:38	
Digital Computer Lab. (Nonr 1834(27))	:17	
Digital Computer Laboratory	16:28	
Economics (NSF G-7056)	2:40	
Economics	:12	
Education	3:16	
Electrical Engineering (NASA NSG 24-59)	1:47	
Electrical Engineering (Nonr 1834(22))	2:00	
Electrical Engineering (AF 33(616)6079)	:26	
Electrical Engineering (NSF G-7421)	6:15	
Electrical Engineering	4:23	
Food Technology	6:55	
Geology	:57	
Institute for Res. on Exceptional Children	3:18	
Institute of Communications Research	3:44	
Marketing	:24	
Mathematics	1:54	
Mechanical Engineering(DA-11-022-ORD1980)	:15	
Mechanical Engineering	5:38	
Medicine	1:10	
Music	:49	
Petroleum Engineering	2:25	
Physical Education	1:10	
Physics (Nonr 1834(05))	:08	
Physics	17:07	
Psychology (AF 49(638)371)	3:34	
Psychology (Nonr 1834(11))	2:32	
Psychology	72:19	
Sociology	:46	
State Department of Conservation	:11	
State Geological Survey	:38	
State Water Survey (ARS USDA)	:09	
State Water Survey (DA-36-039-SC75055)	6:31	
State Water Survey	1:25	
Structural Research (Nonr 1834(03))	10:21	
Structural Research (NSF G6572)	5:13	
Structural Research (AASHO Road Test)	5:21	
Structural Research	39:39	
Student Counseling	:49	
Theoretical and Appl. Mech.(DA11-070-5080RD593)	1:22	
Theoretical and Applied Mechanics	:15	
Zoology	:38	
Cornell University	:32	
Purdue University	:48	
		466:22
		572:47

Error Frequency and Analysis

The machine is normally used for "engineering" and maintenance between 7 a.m. and 10:30 a.m. Since the periods between 7 a.m. and 10:30 a.m. together with certain irregular periods, such as Saturdays and Sundays, are devoted to a heterogeneous group of engineering, maintenance, and laboratory functions, it is more instructive, from an error standpoint to look at the periods between 10:30 a.m. and 7 a.m. of the next day in order to make an observation of the error frequency in the machine. This is the actual period when the machine is designated for use, although certain engineering procedures frequently require the scheduling of extra maintenance time. With this in mind, a summary table has been prepared using the period between 10:30 a.m. and 7 a.m. of the next day. This table lists the running time when the machine was operating, the amount of time devoted to routine engineering, the amount of time devoted to repairs because of breakdowns, and a number of failures while the machine was listed as running. Each failure was considered to have terminated a running period and was followed by a repair period in preparing this table. Since the leapfrog code is our most significant machine test, the length of time which it has been used on the machine is listed separately, together with the number of errors associated with that particular code. This information for the month is presented in Table II.

It is important to notice that, except during scheduled engineering periods, any interruption of machine time that was not planned is considered a failure in this table. In rare cases, where the failure is not known until a later time, it is possible that no repair period is associated with the failure. This over-all system has been adopted because it makes it possible for a machine user to estimate directly the probability that the machine will be "running" any instant of time and the probability of a failure during any given interval of running time.

Table III presents a summary of errors or interruptions for May.

TABLE III

Punch		12
Reader		3
Memory		2
Drum		2
Power Supplies		1
Unknown		1
	Total	21

TABLE II

DATE	RUNNING OK TIME	REPAIR TIME	SCHEDULED ENGINEERING	INTERRUPTIONS OR FAILURES STOPPING OK TIME	TYPES OF INTERRUPTIONS OR FAILURES CAUSING REPAIR TIME	WASTED	LEAPFROG	FAILURES STOPPING LEAPFROG
5/2/60	20:36	:40	2:44	1	(1) Punch #1 failed to punch 2 hole	0	:20	0
5/3/60	21:01	:03	2:56	1	(1) Reader H bad	0	:20	0
5/4/60	21:48	:02	2:10	1	(1) Punch 1 and 4 erred	0	:20	0
5/5/60	21:55	:00	2:05	0		0	:20	0
5/6/60	21:41	:07	2:12	1	(1) Punch #1 failed on 1 hole	0	:20	0
5/9/60	21:11	:24	2:25	1	(1) Punch #1 failed on 1 hole	0	:20	0
5/10/60	20:38	:06	3:16	2	(1) Reader B light out (2) Reader H erred	0	:20	0
5/11/60	20:47	:20	2:53	1	(1) Punch #1 failed on 1 hole	0	:20	0
5/12/60	19:32	1:15	3:13	2	(1) Drum failed (2) Memory 2^{-38}	0	:24	0
5/13/60	21:40	:00	2:20	0		0	:20	0
5/16/60	19:18	1:40	3:02	2	(1) -2000v Power supply change (2) Punch #1 failed on 1 hole	0	:20	0
5/17/60	19:29	1:42	2:49	1	(1) Drum failure	0	:20	0
5/18/60	20:57	:15	2:48	1	(1) Punch #1 failed on 1 hole	0	:00	0
5/19/60	21:55	:00	2:05	0		0	:20	0
5/20/60	21:35	:15	2:10	1	(1) Punch #1 failed on 1 hole	0	:20	0
5/23/60	20:34	:00	3:26	0		0	:25	0
5/24/60	20:34	:18	3:08	1	(1) Punch #1 failed on 1 hole	0	:20	0
5/25/60	21:20	:00	2:40	0		0	:20	0
5/26/60	21:05	:19	2:36	1	(1) Punch #1 sprocket hole failure	0	:20	0
5/27/60	21:13	:17	2:30	1	(1) Punch #1, 8 hole failure	0	:31	0
5/31/60	17:54	2:50	3:16	3	(1) Punch 5, 2 and 8 hole failure (2) Unknown (3) Memory position 2^{-9}	0	:45	0
TOTALS	436:43	10:33	56:44	21		0	7:25	0

PART V

IBM 650 USE AND OPERATION

IBM 650 Routines in Progress

Two different descriptions of the Statistical Analysis Library tape currently under development are being prepared. The first is a user's manual which will aid in the preparation of materials for use on these routines. The second is a programmer's manual which constitutes a complete description of the system and which will enable changes and additions to be made to the system.

IBM 650 Usage

During the month of May specifications were presented for 14 new problems. This list does not indicate how the IBM 650 was used because large amounts of machine time may have been consumed by problems with numbers less than 104'T. Numbers followed by T are for theses.

104'T Animal Science. Protein-Calorie Ratio in Swine Nutrition. This problem involves the testing of various levels of dietary protein and fat (lard) fed to growing-finishing swine. The criteria considered in evaluating performance will entail over twenty (20) carcass measurements plus growth and feed utilization data.

The mathematical method to be employed will involve analysis of variance by method of fitting of constants.

The criteria to be tested are: average daily gain, average daily feed consumption, average feed efficiency, slaughter weight, dressed carcass weight, dressing percent, average backfat thickness, ham weight, Boston weight, loin weight, picnic weight, percent 4 lean cuts, fat trim, loin eye area, percent expressible H_2O, ham surface lean, ham surface fat, ham surface bone, specific gravity of carcass, length of carcass, picnic lean area, and picnic fat area.

105' State Water Survey. Sample Size Analysis. The sample size required to have 90% confidence that the mean of a sample is within 90% of the parent

population will be determined for each of the 24 class intervals into which the drop size distribution is separated. The means and variances of the individual one-cubic meter samples will be determined and by using a "T" distribution the sample size will be determined.

106' Psychology. Characteristics of Hypnosis Volunteers. The problem is the attempt to study the psychological characteristics of people who are willing or unwilling to be subjects for research on hypnosis. There are four sets of data; a survey questionnaire, which contains background data and information about the subject's experiences with hypnosis, feelings about it, and opinions on the topic, and three general personality inventories: a) MMPI (about 300 subjects), b) Cattell 16 PF (about 300 subjects), and c) California Personality Inventory (about 85 subjects).

Basically the analysis of data involves: obtaining frequency distributions of every item on the survey questionnaire by age and sex, intercorrelating each questionnaire item with all other questionnaire items, and intercorrelating each questionnaire item with all items on each of the personality inventories.

107' Electrical Engineering 321. Network Analysis. In a given electrical network a certain combination of R, L, and C exists. The problem is for a given set of parameters to find certain responses for given elements in the circuit.

There are sixteen of these responses to be calculated for each given set of parameters. Altogether, there will be about forty-eight of these sets. A sample of one of these responses is given V_0, I_L, P. Find X_L and L.

$$|Z_L| = \frac{|V_0|}{I_L} \qquad R_L = \frac{P}{I_L^2}$$

$$X_L^1 = \sqrt{Z_L^2 - R_L^2}$$

$$\frac{X_L}{\omega} = L \ .$$

108' Chemistry. Structure of Casimidine and Cystine. The problem is to locate, using single crystal x-ray data, the positions of all atoms in the

casimidine and cystine molecules, as a first step in explaining their biological properties.

Applications of IBM 650 will be made to:

1. Data reduction - of up to 1,000 observations.
2. Structure factor calculation - calculation of theoretical scattering amplitudes from proposed models.
3. Fourier synthesis - calculation of electron density maps from magnitudes and phases of coefficients as calculated in step 2 above.

109' Forestry. Spectral Reflectance of Forest Vegetation. This research project requires transformation of continuous curve data to chromaticity coordinates. This is basically an integration problem.

110' Dairy Science. Economic Analysis of Large Commercial Dairies. Twenty-seven observations were made in forty-seven large commercial dairies located in the Los Angeles area. These observations were repeated annually over a three year period. A multiple correlation analysis is planned to determine how each of the 26 factors affects Return on Capital Investment. Also, the product moment correlations, means and standard deviations by year are desirable.

111' Agronomy. Soil Sampling for Physical Properties. To study the magnitude of different sources of variation as expressed in measurements of various physical properties of soil, several sampling sites were carefully selected. Samples were taken at various locations at each site and at several depths. The soil moisture persent at various tensions was measured in duplicate.

The computer will be used to evaluate the components of variance by analysis of variance procedure.

112' Nuclear Engineering. Effective Thermal Neutron Cross Sections. In reactor analysis an important problem is the evaluation of effective cross sections for a given macroscopic system. The effective cross section is found by:

$$\sigma_{eff} = \frac{\int_0^{E_c} \sigma(E)\ \Phi(E)\ dE}{\int_0^{E} \Phi(E)\ dE}$$

where $\Phi(E)$ is the neutron flux distribution and $\sigma(E)$ is the cross section as a function of energy.

113' Physics. Resonance Absorption in Uranium-238. A long-standing problem in reactor analysis is presented by the effects of resonance absorption in heavy elements, and its influence on neutron multiplication. The use of Monte Carlo methods has been explored, and preliminary studies and numerical experiments have been made with Illiac (Problem Numbers 1570 and 1571). As a result of this work and of concurrent analytical investigations, it has become apparent that the expressions for the Doppler broadened line shape of the resonance lines could be obtained in a form suitable for further digital computations.

The purpose of this program is to obtain a complete evaluation of the resonance integrals for Uranium-238. This work is of particular interest and timeliness because new experimental data for U-238 and other heavy elements have recently been published. The analytical technique and the computer routines based on it are of a more general interest, too. For instance, this program can also be applied to the study of Th-232, Pu-239, and to other resonance absorbers. It can also be applied in problems where one encounters mixtures of resonance absorbers with moderators like Carbon or Beryllium. In view of this general usefulness, the program was written for the IBM 650 which is frequently used for other reactor calculations.

114' Theoretical and Applied Mechanics. Shear Difference Analysis. The problem is to determine the stress tensor in a three dimensional region from photoelastic birefringence data. The routine performs a numerical integration of the equations of equilibrium $\sigma_{ij} + X_{ij} = 0$ along a coordinate line, and then finds the eigenvalues and eigenvectors of the stress matrix.

In the above:

$\sigma =$ stress

i and j are positions in the stress matrix

$X =$ body force .

115' Physics. Particle Motion. The motion of a particle is studied under a certain transformation. It is found that this motion at first follows an

elliptical path, then a hyperbolic path, then an elliptical path, etc. The problem is: given an X_0, how will the image point C behave under this transformation as X_0 is varied.

The transformation equation along the paths involve elliptic function S. Interpolation will be performed between values of these elliptic functions by the table look up feature.

116' Nuclear Engineering. Reactor Kinetics and Stability. One of the first problems of interest concerning the operation of the Illinois TRIGA reactor will be a study of Reactor Kinetics, i.e. a study of problems dealing with the start-up, shut-down, and power level changes of the reactor.

In order to investigate problems of this type it is desirable to have a computer routine which solves the nonlinear reactor kinetics equations. These equations are:

$$\frac{dr(t)}{dt} = [k(t)\,(1 - \beta) - 1]\;\; n(t)/\ell \;\; + \sum_i \lambda_i \; c_i(t) \;,$$

$$\frac{dc_i(t)}{dt} = - \lambda_i \; c_i(t) + \frac{k(t)\;\beta_i}{\ell} \;\; n(t) \;,$$

where n(t) is the neutron density, c(t) represents the precursor atom density, k is the neutron multiplication factor, β_i is the delayed neutron concentration of the ith group, λ_i is the decay constant of the ith group, ℓ is the mean lifetime for neutrons in a finite medium, and t is the independent variable, time.

Several k(t) functions will be used in the program. These will include, for example, step changes of k with time, sinusoidal variations, ramp functions with disturbances, triangular waves, etc.

The integration is performed using the Runge-Kutta-Gill method and the Milne method; and the program is written in the Bell Interpretive System.

117' Nuclear Engineering. Two Group-Criticality. Previously two group-criticality computations for nuclear reactions have been done by hand. Carrying out these type calculations by machine would be educational in two respects:

1. Verification of results qualitatively.
2. Evaluation of the economics of machine operation.

The problem involves solution of a fourth order determinant with iteration on a variable in the determinant and solving for the critical size of a two region cylindrical reactor.

Table I' shows the distribution of the IBM 650 machine time for the month of May.

TABLE I'

		Hrs:Min		
Regular Maintenance		18:26		
Unscheduled Maintenance		11:28		
Library Development		:47		
Log Summation		:23		
Demonstration		2:45		
Classes		48:48		
Civil Engineering 297	:21			
Civil Engineering 391	6:57			
Math 295	28:15			
Math 395	13:15			
Wasted		17:51		
			100:28	
Use by Departments				
Agronomy		1:01		
Animal Science		1:50		
Chemistry		6:16		
Digital Computer Laboratory		1:47		
Electrical Engineering		:11		
Graduate College		4:31		
Nuclear Engineering		4:15		
Physics		3:07		
State Water Survey		1:11		
Statistical Service Unit		84:46		
Bur. of Ed. Research	3:53			
Bur. of Inst. Research	3:35			
Bursar's Office	9:44			
Business Office	10:11			
DHIA	32:32			
Dairy Science	:34			
Education	5:38			
Horticulture	:42			
Inst. of Labor Rela.	1:34			
Marketing	4:01			
Mining and Met. Eng.	2:20			
Psychology	3:25			
Student Counsel. Ser.	6:37			
Structural Research		9:34		
Theoretical and Applied Mechanics		1:07		
			119:36	
				220:04

Error Frequency and Analysis

The IBM 650 is normally on from 8 a.m. to 5 p.m. The machine is used for preventive maintenance from 8 a.m. to 12 noon on Mondays.

Table II' gives the daily breakdown of machine time with respect to wastage and unscheduled maintenance.

Table III' presents a summary of errors for May.

TABLE III'

Tape units and tape control		9
Unit refused to obey orders	3	
High speed rewind not working properly	1	
Vacuum not breaking	1	
Control not receiving orders from console	4	
Distributor blank bits		1
Core storage		2
533 card jam		1
407		4
Printing incorrectly	3	
Printing and reading incorrectly	1	
652 fuse		1
	Total	18

TABLE II'

DATE	RUNNING OK TIME	SCHEDULED ENGINEERING	REPAIR TIME	WASTED	FAILURES STOPPING OK TIME	TYPES OF FAILURES CAUSING REPAIR TIME
5/2/60	5:22	3:37		:11	2	(1-2) Hung up on 06 order for Unit 3
5/3/60	8:50		:25	:55	2	(1) Unit 2 wouldn't obey 07 order (2) 533 card jam
5/4/60	8:21			:39	0	
5/5/60	3:25		5:44	:58	3	(1) Blank bits in distributor (2) Hung up on 25 orders (3) 407 printing totals incorrectly
5/6/60	:53			8:07		Wasted time due to core being out
5/9/60	6:24	3:01		:30	4	(1-4) Control didn't receive tape orders
5/10/60	12:30		2:30	:10	1	(1) 407 on-line printing word 3 incorrectly
5/11/60	8:29			:31	0	
5/12/60	8:40			:20	0	
5/13/60	8:46			:17	0	
5/16/60	7:50	4:05		:10	0	
5/17/60	11:02			:38	0	
5/18/60	8:56		:11	:13	0	
5/19/60	15:06			:14	0	
5/20/60	8:12			:54	0	
5/23/60	4:23	3:58		:39	0	
5/24/60	8:39		:21	:25	3	(1-2) 407 giving random errors in print wheels,1-30 (3) Timer on Unit 1 not set properly
5/25/60	7:03		:45	1:42	1	(1) Unit 3 didn't have vacuum fill up
5/26/60	8:11		1:07	:07	1	(1) Fuse blown in 652
5/27/60	9:17		:25	:05	0	
5/31/60	12:00	3:45		:06	1	(1) Bad tube in 655
TOTALS	172:19	18:26	11:28	17:51	18	

PART VI

GENERAL LABORATORY INFORMATION

Seminars

"Semiautomatic Scanning and Measuring of Bubble Chamber Negatives", by Professor Bruce H. McCormick, Digital Computer Laboratory, University of Illinois, May 2, 1960.

"The 52 Bit Shifting Register Test Unit", by Mr. Robert E. Swartwout, Digital Computer Laboratory, University of Illinois, May 9, 1960.

"Singular Shock Intersections in Plane Flow", by Mr. William C. Gear, Digital Computer Laboratory, University of Illinois, May 16, 1960.

"Signed-Digit Representations of Numbers for Parallel Arithmetic Units", by Mr. Algirdas A. Avizienis, Digital Computer Laboratory, University of Illinois, May 23, 1960.

Reports

Report No. 99, "Logic Computer Programs", by Geneva G. Belford, May, 1960.

Report No. 100, "Singular Shock Intersections in Plane Flow", C. W. Gear, May 17, 1960.

Report No. 101, "A Study of Redundant Number Representations for Parallel Digital Computers", by Algirdas A. Avizienis, May 23, 1960.

Personnel

The number of people associated with the laboratory in various capacities is given in the following table:

	Full-Time	Part-Time	Full-Time Equivalent
Faculty	9	2	10.5
Research Associates	1	1	1.0
Graduate Res. and Teaching Assts.	5	34	22.4
Graduate Fellows	2	-	2.0
Administrative and Clerical	5	-	5.0
Other Nonacademic Employees	29	4	30.5
Totals	51	40	71.4

The Laboratory Advisory Committee consists of Professors H. C. Brearley, L. D. Fosdick, D. B. Gillies, B. H. McCormick, G. A. Metze, D. E. Muller, T. A. Murrell, W. J. Poppelbaum, J. E. Robertson and J. N. Snyder.

UNIVERSITY OF ILLINOIS

GRADUATE COLLEGE

DIGITAL COMPUTER LABORATORY

TECHNICAL PROGRESS REPORT

PART I - HIGH-SPEED COMPUTER PROGRAM

PART II - CIRCUIT RESEARCH PROGRAM

PART III - MATHEMATICAL METHODS

PART IV - SWITCHING CIRCUIT THEORY

PART V - ILLIAC USE AND OPERATION

PART VI - IBM 650 USE AND OPERATION

PART VII - GENERAL LABORATORY INFORMATION

June, 1960

PART I

HIGH-SPEED COMPUTER PROGRAM

This work is supported in part by Contract No. AT(11-1)415 of the Atomic Energy Commission and in part by the University of Illinois. Contract No. AT(11-1)415 is supported jointly by the Atomic Energy Commission and the Office of Naval Research.

1. Logical Design

A scheme for performing binary division using a base-four shift was developed. The process yields an exactly-rounded quotient and a true remainder which takes into account quotient round-off. The remainder is always less than or equal to half the divisor in magnitude. At the end of division the quotient is in A and the remainder in Q with their exponents in EA and ER respectively.

The logical design for the new predictor and subtractor circuits has been partially completed. The predictor design will employ speed-independent logic. The number of transistors required is expected to be around 300 as opposed to 1500 for the previous design. This reduction results from the fact that the new division process is essentially a binary nonrestoring division requiring far less precision for prediction of the next quotient bit. The price paid for this reduction in complexity is a 4 to 5μsec increase in the time required to perform division. The previous time was estimated at 7 to 8μsec while the new time is estimated to be approximately 12μsec based on a 250mμsec shift time for division.

(J. O. Penhollow)

2. Control Design

Design effort and analysis of the subcontrol mentioned in the November and December, 1959 reports was resumed during the month and partially completed. This subcontrol has the change chart shown on Figure 1 and C and $\overline{C}$ are complementary output signals from a scale-of-two counter driver by node 1. Although this gating sequence is similar to those anticipated for the new machine, the subcontrol performs a fictitious operation. The selection of this particular change chart is discussed in the November report.

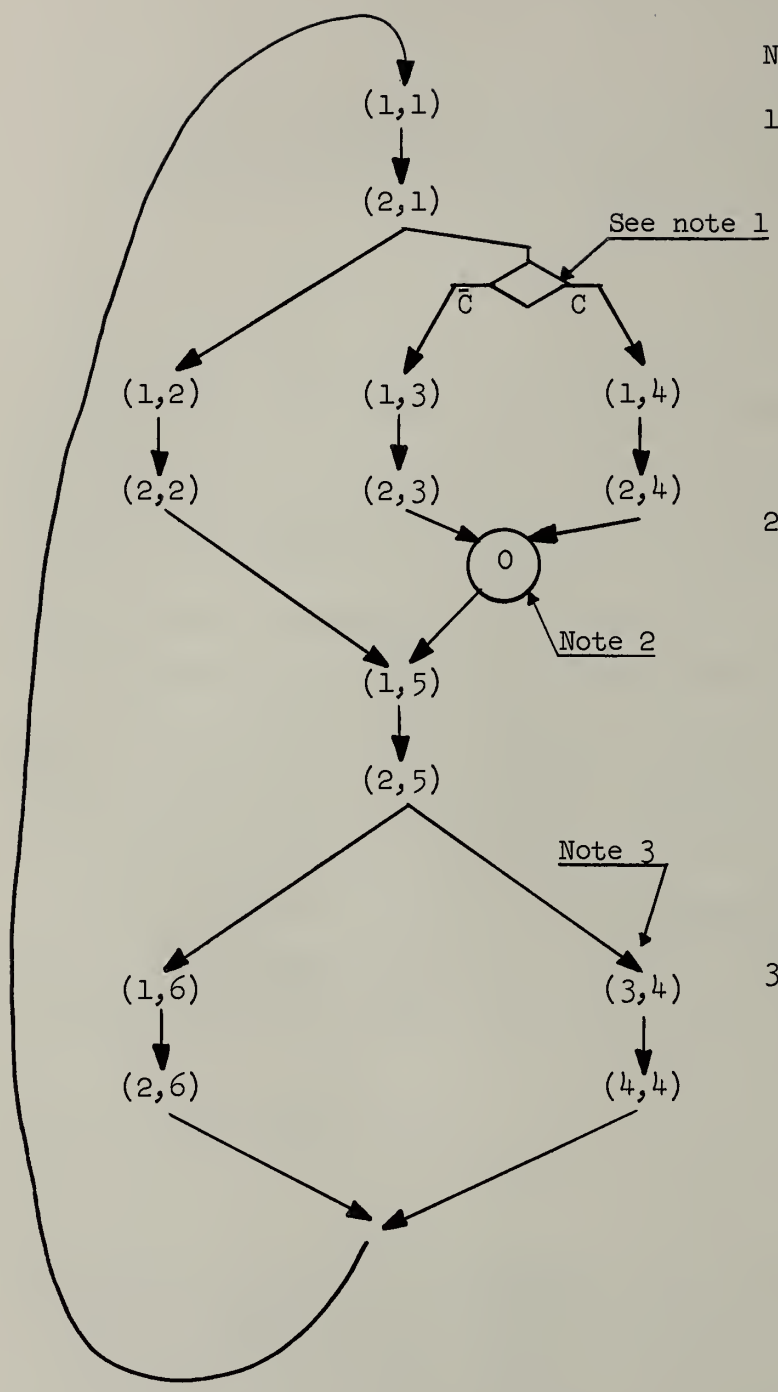

NOTES:

1. This symbol means a conditional branching-out with the rules for the condition given adjacent to the symbol. Signals C and $\bar{C}$ are complementary signals that change once for every two changes of node 1.

2. This OR symbol is to be interpreted in a very general sense. Its action implies that information has flowed down either of the conditional paths. The parity of the actual signals may dictate use of different logical building blocks.

3. This change assumes that in the conditional branching-out of the change above, that C = 1. Otherwise this change would be (1,4).

Figure 1

Change Chart for the Subcontrol

The ultimate purpose of this design and analysis work is to select either the C-element or the Eccles-Jordan Flipflop as the basic memory element for use in speed-independent control circuits. This purpose will be accomplished in the following manner:

a. Design the logic for a subcontrol using C-elements,

b. Design the logic for a subcontrol using Eccles-Jordan Flipflops,

c. Select the most desirable of these two subcontrols using a paper comparison of the component cost and the speed of operation as the basis for selection,

d. Build the selected subcontrol and test it. This subcontrol can be so wired as to operate as a separate unit or to be connected to run Test Unit #2.

During June steps (a) and (b) above were completed with both subcontrols designed to be speed-independent. The logical designs were tested using the Illiac Q-5 Complete Circuit Analysis Routine. The paper comparison of step (c) is now in progress.

(R. E. Swartwout)

3. Basic Circuits

The logical design of the Eccles-Jordan subcontrol mentioned above was greatly simplified when the design of a new Eccles-Jordan Flipflop was completed. The primary advantage of this new circuit is that whereas in the older design the input state of 1-1 was disallowed, this restriction is no longer necessary. Circuitwise this change required only two resistors and two diodes. However, this simple change has produced a memory element that is many times more useful in the design of speed-independent control circuits. The element contains 6 transistors, 14 diodes and 3 stabistors, and its operation time is two collector delays.

(N. H. Johnson and R. E. Swartwout)

A family of curves of $V_{out} - V_{in}$ vs. load current for selected V_{in} values was plotted for the standard emitter-follower. From these curves it was determined that the approximation used in their calculation--using the nearest, in collector voltage, curve of V_{EB} available for the calculation--was too rough to be of much use. As soon as a curve of maximum and minimum V_{EB} is available for V_C of -6v, a new set of curves will be calculated and plotted using V_{in}'s of +3v, +1v, -3v, and -1v, which correspond to V_{C1}'s of -8v, -6v, -2v and -4v respectively. Thus the exact curves given in the set dated March 4, 1960, plus the V_C = -6v curves can be used with no approximations involved.

(J. L. Muerle)

4. Core Storage Unit

Efforts to calculate the sense amplifier using P.S. #1455 were terminated. P.S. #1206 was tried on the circuit and convergence was attained in less than 5 minutes. A full set of tolerance calculations will now be run on the sense amplifier with the modifications indicated by the first P. S. #1206 runs.

(J. L. Muerle)

Extensive data was compiled on two types of low coercivity ferrite cores (RCA XF-4008 and XF-4007). In a two-core-per-bit, partial switching configuration, these cores proved to be excellent fast peaking, low drive memory cores.

(B. E. Briley)

5. Auxiliary Storage

A report on dropout testing has been written. It describes the nature of the problem, the equipment used to measure dropouts and some of the early results. The report is "Dropout Tests on Ampex FR300 Magnetic Tape Unit", by C. N. Liu and T. C. Piper, D.C.L. File No. 322, June 28, 1960.

A direct-coupled, diode steering binary counter is being built for future dropout tests.

(C. N. Liu and M. D. Freedman)

The remote control unit for the FR300 has been built and tested. Some additional circuits for the remote control unit have been designed but not yet built. These circuits will automatically control the dropout counting equipment so that dropout data may be collected automatically during unattended runs.

Another discrepancy has been found in the original FR300 design. During certain (legitimate) manual shutdown operations, it is possible to pull in both pinch rollers, thus attempting to drive the tape in both directions at once. To get out of this state requires a rather time-consuming procedure.

(L. J. Peek, Jr.)

A worst-case tolerance analysis of the variable-frequency clock pulse generator circuit was made using Illiac routines for the direct-coupled portions of the circuit and using slide rule estimates for the capacitor coupled portions. Results of the latter tend to be unnecessarily conservative as the manual procedure requires a stage-by-stage analysis, whereas the computer routines for D.C. analysis consider the circuit as a whole.

(R. L. Cummins)

6. Solution of Circuit Equations

The new SIR KITTSOLVER program has been completed and is ready for use. This program is similar to the old one (see File #287), but differs primarily in having an improved format for input and output, and an improved representation of transistor behavior. A report describing the properties and use of this program will be issued shortly.

(L. D. Fosdick, C. Wilmot, M. Cross)

PART II

CIRCUIT RESEARCH PROGRAM

(Supported in part by the Office of Naval Research under Contract Nonr-1834(15)).

1. Summary of the June Work

All the work in June was concentrated on flow-gating since the system as a whole will have to be finalized in the near future and incorporated with the arithmetic unit of the new computer project. In particular tests were run involving 14 bits and the necessary drivers. Details are discussed below.

2. Flowflops

The final version of the flowflop was designed. Experiments conducted with a 14-bit test set resulted in the following conclusions:

1. In order to maintain speed and reliability as a system, i.e. bitline capacitance effects, a Zener bleeder should be used. This allows considerable lowering of the bitline impedance.
2. A NPN-PNP emitter follower should be used at the end of each bitline. This allows the direct driving of a 91-ohm cable and gives flowgating the desired isolation.

The general topology of the output circuit is shown in Figure 1.

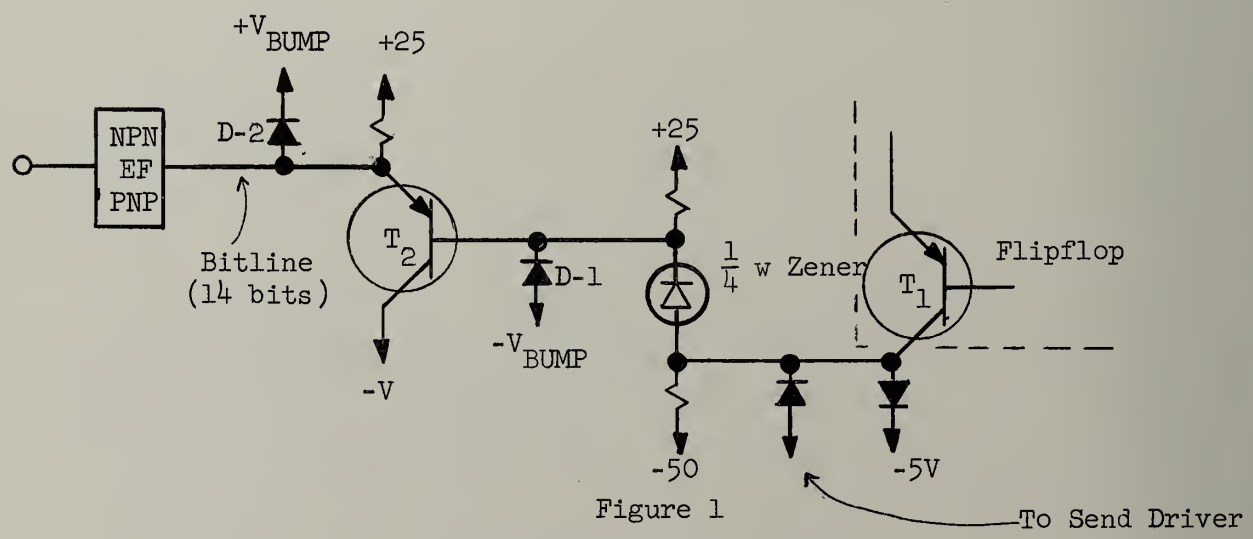

Figure 1

Flowflop Output Circuit

In this output circuit a considerable number of diodes and stabistors are saved: only a single positive and negative bumping supply is needed. Diode D-1 occurs in each flipflop, diode D-2 on each bitline. The total number of switching diodes is therefore eight per bit. The circuit used 1/7 stabistor per bit if 14 words are used in the assembly. A final tolerance analysis using Illiac is in progress.

(H. Guckel)

3. Flowflop Read-In Drivers

After last month's experiments with the circuit using GF45011 transistors, a less expensive circuit was sought. Two types of circuits were designed and tested. Both are intended to be mounted on a different chassis from the flowflop chassis.

3.1 High Power Driver (See Figure 2)

This driver uses 4 transistors (one GF45011 and three silicon power transistors). Figure 3 shows the waveforms obtained at the outputs of the three power transistors, each one delivering 33ma into the load at R_1 and accepting 66ma from the load at R_2. A 517 Tektronix scope was used throughout.

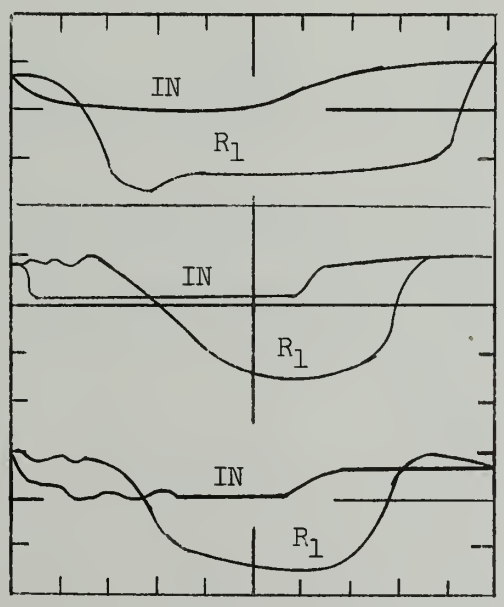

Input and R_1 of (1)
4v/div., 20 mμs/div.

Input and R_1 of (2)
4v/div., 20 mμsec/div.

Input and R_1 of (3)
4v/div., 20 mμs/div.

Figure 3
Waveforms of High Power Read-In Driver

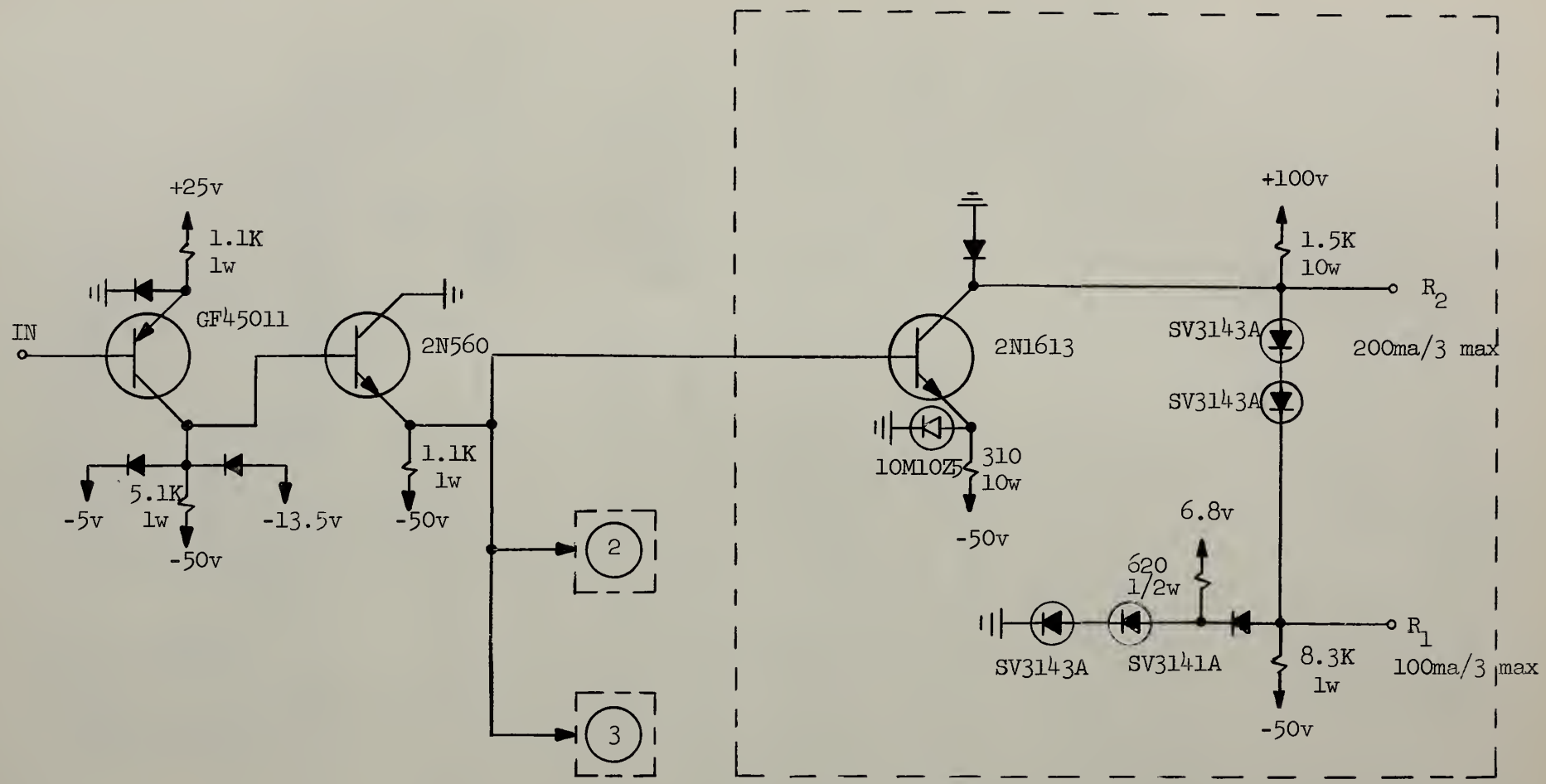

Uncircled diodes are Transitron S577G's

Power Supplies Total Power Dissipation 50w

V(V)	+100	+25	+6.8	-5	-13.5	-50
I(ma)	215	27	65	20	8	540
W(W)	21.5	0.68	0.45	0.1	0.12	27

	α_0
GF45011	0.97 ~ 1
2N560	0.90 ~ 1
2N1613	0.90 ~ 1

Figure 2

High Power Read-In Driver

3.2 Low Power Driver (See Figure 4)

Although the total power output of this driver is the same as that of the driver mentioned in the preceding section, the output stages are formed of low power transistors. The only practical difference is that a negative swing limiter has been added at R_1. Figure 5 shows the waveforms of this driver.

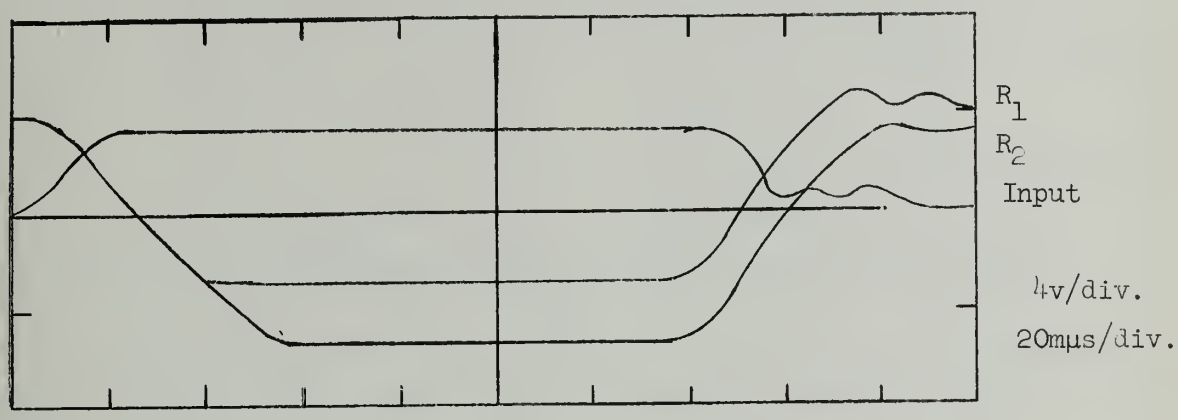

Figure 5

Waveforms of Low Power Read-In Driver

3.3 Conclusions as to the Choice of Read-In Drivers

The low power circuit was chosen as a final model(in spite of the fact that it uses more transistors)because of economy, low power dissipation and high speed operation.

(T. Kunihiro)

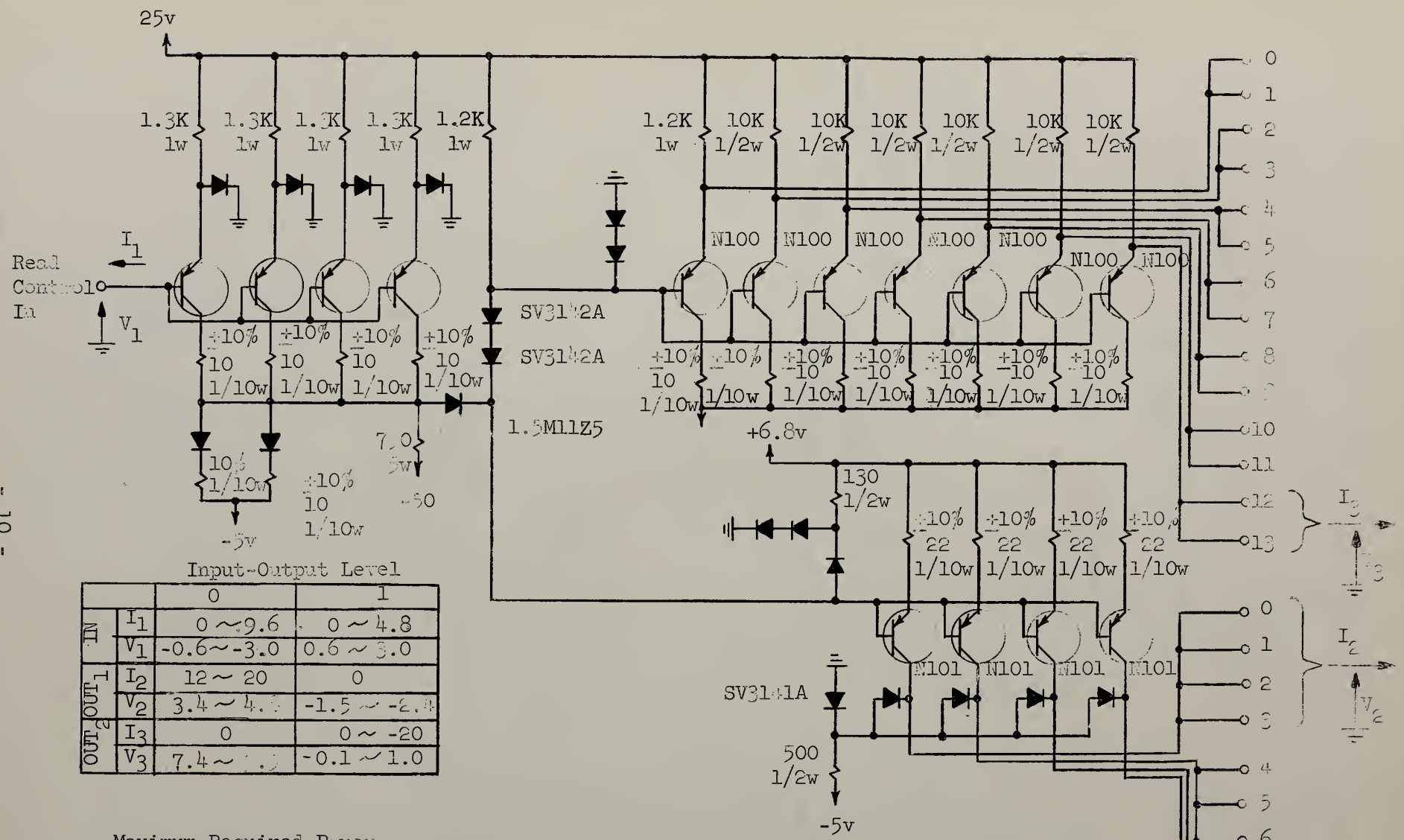

Input-Output Level

		0	1
IN	I_1	0 ~ 9.6	0 ~ 4.8
	V_1	-0.6 ~ -3.0	0.6 ~ 3.0
OUT_1	I_2	12 ~ 20	0
	V_2	3.4 ~ 4.[illegible]	-1.5 ~ -2.4
OUT_2	I_3	0	0 ~ -20
	V_3	7.4 ~ [illegible]	-0.1 ~ 1.0

Maximum Required Power

Source	0	1
+25v	1[illegible]0 ma	140
+6.8v	[illegible] ma	30
-5v	[illegible]0 ma	230
-50v	65 ma	[illegible]0

Unless Specified:

Resistors	±3%
Power Supplies	±3%
Transistors	GF45011
Diodes	S577G

Figure 4

PART III

MATHEMATICAL METHODS

1. Differential Equations (Supported in part by National Science Foundation under Grant G9503.)

The IBM 650 code for "Kutta's Simpson's Rule" mentioned in the April 1960 report has been completed. A second IBM 650 code for Kutta's Simpson's Rule which does not use the binary ladder summation strategy has also been completed. These programs are being applied to various problems for the purpose of comparing accuracy and computing times.

(L. D. Fosdick, C. Clifford)

2. The Evaluation of a Polynomial of Degree 2n with n+1 Multiplications (Supported in part by National Science Foundation under Grant G9503.)

Let $P_{2n}(x) = x^{2n} + a_1 x^{2n-1} + \ldots + a_{2n}$ be a real monic polynomial of degree 2n in x. The customary method of evaluating this polynomial for a particular value of x consists of the iteration

$$S_1 = x + a_1$$

$$S_{i+1} = xS_i + a_{i+1}, \quad \text{for } i = 2,3,\ldots, 2n-1.$$

Then $S_{2n} = P_{2n}(x)$ requires, for this method, 2n-1 multiplications and 2n additions. One additional multiplication is required for a non-monic polynomial, and one extra addition and multiplication is required for degree 2n+1.

In the above iteration, one coefficient a_{i+1} is introduced during each addition, no coefficient is introduced during the multiplication, and the degree of the polynomial $S_i(x)$ is increased by 1 at each iterative step. To evaluate the polynomial with fewer arithmetic operations, the iterative step should increase the degree of the polynomial by 2 and introduce two coefficients. A family of such iterations, depending on the parameter k, is given by

$$Q(x) = x(x - 2k)$$

$$Q_2(x) = x(x + p_1) + q_1$$

$$Q_{2i}(x) = [Q(x) + p_i]\, Q_{2i-2}(x) + q_i \qquad \text{for } i = 2,3,\ldots,n.$$

This method requires 2n+1 additions and only n+1 multiplications to evaluate $Q_{2n}(x)$. It has been shown that for any choice of k, there exist numbers $p_1 \ldots p_n$ and $q_1 \ldots q_n$ such that $Q_{2n}(x) = P_{2n}(x)$. For certain values of k, some of the numbers p_i, q_i may be complex, however it has been proved that for all sufficiently large k's, the numbers $\{p_i q_i\}$ are all real. The method can be extended to non-monic polynomials, polynomials of odd degree, and polynomials with complex coefficients for a complex variable x. The accuracy obtained depends on the choice of k, so it would be advisable to determine the intervals of values of k for which all coefficients p_i and q_i are real, and then find the best value for k to minimize the accumulation of rounding errors.

In the special case n = 4, real solutions exist for all real values of k, and only 2 multiplications are required using

$$
\begin{aligned}
k &= (1 - a_1)/4 \\
Q(x) &= x(x - 2k) \\
Q_2(x) &= Q(x) + x + v_1 \\
Q_4(x) &= Q_2(x)[Q(x) + u_2] + v_2 \\
&\equiv x^4 + a_1 x^3 + a_2 x^2 + a_3 x + a_4
\end{aligned}
$$

for which unique values of v_1, v_2 and u_2 can be found.

This work is also reported in File No. 325, "The Evaluation of a Polynomial of Degree 2n with n+1 Multiplications".

(D. B. Gillies, C. W. Gear)

PART IV

SWITCHING CIRCUIT THEORY

(Supported in part by the Office of Naval Research under Contract Nonr-1834(27).)

Further work has been carried out on the development of an Illiac program for testing asynchronous circuits. A description of the basic process was given in the October 1959 progress report.

In the presently contemplated scheme, the Illiac will be used to generate sequences of states called change paths. In these change paths, just one signal is permitted to change between consecutive states. Each such change must occur on a newly excited node, in other words, upon a node which could not have changed in an earlier state of the sequence.

Termination of a sequence representing a change path occurs when no newly excited node may be changed except one which feeds some node m which is fed by some other node which has changed earlier in the sequence. Speed independence is checked only between terminal states of change paths. New change paths are initiated by relaxing newly excited nodes which were not changed in previous change paths.

A description of the method will be presented as a numbered conference paper at the American Institute of Electrical Engineers meeting in Chicago in October.

(W. D. Frazer)

PART V

ILLIAC USE AND OPERATION

New Illiac Codes

During the month of June two new routines were added to the Illiac Auxiliary Library.

M29 - 295 Drum Routine for Linear Programming by the Simplex Method (SADOI or DOI). This is a modification of the M15 - 183 Williams Memory Routine of the same name. It is somewhat slower but has a larger capacity. The use of the drum approximately doubles the time over that required if the problem could be handled in the Williams Memory.

The size of the problem must meet the two restrictions:

Drum Storage $(j + 1)(i + 1) \leq 10{,}240$

Williams Memory Storage $4i + 2(j + 1) \leq 662$

where j = number of structure vectors, and i = number of basis vectors.

(Writeup prepared by R. W. Hacker)

M30 - 296 Williams Memory Routine for Linear Programming by the Simplex Method - Modified for a Variable Resource b_i (SADOI or DOI). This routine is suitable for maximization problems only. The general problem is similar to Routine M15 - 183. However, the first resource is set equal to zero on input. The program will then supply a negative number in its place which will get larger in the magnitude with each iteration.

The interpretation of this negative number is: If the original value of the resource being varied had been equal to the absolute value of the negative number, then the current solution would have been optimal.

(Writeup prepared by R. W. Hacker)

Illiac Usage

During the month of June specifications were presented for 27 new problems. This list does not indicate how the Illiac was used because large amounts of machine time may have been consumed by problems with numbers less than 1706T. Numbers followed by T are for theses.

1706 T Electrical Engineering. Electron Bunching by Traveling-Wave Fields. This problem is concerned with the determination of trajectories for charged particles moving in a one-dimensional time-varying electric field - specifically the axial component of the forward traveling TM_{0mn} wave in a slow-wave structure operating at microwave frequencies. The purpose is to calculate the velocity, energy, and relative axial displacement for electrons injected into the structure with varying initial velocities and with varying initial time phase. These quantities will be evaluated at specified values in axial displacement so that energy spread, velocity spread, and phase spread may be determined for each set of injection conditions used.

The equation to be solved is the relativistic equation of motion

$$\frac{d(mv)}{db} = \frac{dT}{dz} = -eE \sin \omega \left(t - \int_0^z \frac{dz}{v}\right)$$

where m is the relativistic mass of the electron, T is the kinetic energy of the electron, e is the charge on the electron, v is the electron velocity, E is the amplitude of the axial component of the electric field, ω is the angular frequency, z is the axial coordinate and t is the time variable.

If Δ is defined to be the difference in time phase of the electron relative to the null point of the forward wave, the above equation may be transformed into

$$\frac{d\gamma}{d\zeta} = -\alpha(\zeta) \sin \Delta$$

$$\frac{d\Delta}{d\zeta} = 2\pi \left[\frac{1}{\beta_\omega(\zeta)} - \frac{1}{\beta}\right]$$

$$\beta = \sqrt{1 - \frac{1}{\gamma^2}}$$

where

$\beta = v/c$ electron velocity relative to the velocity of light,

$\gamma = \frac{m}{m0} = \frac{1}{\sqrt{1-\beta^2}}$ relative mass, or energy, of the electron,

$\zeta = z/\lambda_0$ relative displacement in wavelengths,

$\beta_\omega = v_\omega/c$ wave velocity relative to the velocity of light,

$\alpha = \dfrac{eE\lambda_0}{mx^2}$ energy gained per wavelength relative to the rest energy.

In these equations β_ω and α are to be specified functions of ζ only and are to have the following general forms:

1) constants
2) $a - b \cos \pi \zeta/n$
3) $a - b \exp (n \zeta)$
4) $a + b \zeta$

where a, b, and n are constants.

Library Routine F5 will be used to integrate the equations for given final values in ζ and with the following ranges in the variables and parameters:

$$0 \leq \zeta \leq 14$$
$$-\pi \leq \Delta \leq +\pi$$
$$-\pi \leq \Delta(0) \leq +\pi$$
$$0.1 \leq |\alpha| \leq 2$$
$$0.2 \leq \beta < 1$$
$$1.02 \leq \gamma \leq 10$$
$$0.4 \leq |\beta_\omega| \leq 1 \quad .$$

1707 Electrical Engineering. Ionosphere Propagation Study. This program is involved in a project to plan and help to carry out an experiment to investigate the propagation and interaction of electromagnetic waves in the ionosphere. The experiment will use a high-power pulse transmitter, carried into the ionosphere by an Aero Bee rocket, to "heat" the ionosphere and increase the electron collision frequency. The change in collision frequency is to be detected on the ground by observing changes in a low-power sensing signal also transmitted from the rocket.

Illiac will be used to calculate the attenuation and phase-shift of various sensing signals as they propagate from the rocket to the ground. The

basic calculation is the refractive index, n, given by

$$n^2 = (y + jx)^2 = 1 - \frac{1}{w} \frac{w_N^2}{w \pm w_H - j\nu}$$

where w is the sensing frequency, and w_N, w_H, and ν are parameters of the ionosphere which vary with height. The summation of the effects at various heights will then be used to determine theoretical values for the total attenuation and phase shift of the sensing signals.

1708 Institute of Labor and Industrial Relations. Frustration – Turnover. The purpose of this study is to derive a maximum predictability formula using frustration indices from 24 substantive job factor areas to predict perceived mobility.

The population (140) will be divided into two equal groups (odd-even) for cross validation purposes. The following procedure will be used separately for each group.

Each of the 24 job factors includes three separate responses (a, b, c) for each individual. These individual responses (a, b, c) for each job factor (1-24) are to be transformed into standard Z scores for response using group mean and spread for the particular response transformation.

The same procedure is to be followed for each of seven separate responses for each individual, indicating mobility.

Job factor indices (1-24) for each individual will then be derived using the formula: Job Factor Index = $Z_a(Z_b + Z_c)$. By means of multiple regression analysis, regression weights will be derived for each of the 24 job factors for maximum predictability of each one of the seven separate mobility items.

1709 Institute for Research on Exceptional Children. Parents' Dissatisfaction with Social Behavior of Children Ages 11 to 16 and Childrens' Perceptions of Parents' Dissatisfaction. This problem involves factor analyses of the responses of both parents from 118 families to a 50-item checklist of activities which describes a broad spectrum of the behavior of children. In responding to the 50-item list, the parents indicated whether or not they were satisfied with their child's performance for each activity. Sixty-one boys and sixty-three girls were rated by their fathers and mothers. These children are of ages 11 to 16, inclusive.

In addition the responses of 138 children (66 boys, aged 10 to 16 inclusive from 116 families) to the same 50 item checklist are also to be factor analyzed. Each child indicated his perception of his parents' satisfaction or dissatisfaction with each activity listed.

For the parents' responses separate factor analyses are to be executed for fathers' responses for boys and girls combined and mothers' responses for boys and girls combined. For the childrens' responses, separate factor analyses are to be done with the perception of boys and girls combined for fathers' satisfaction and for mothers' satisfaction

For each analysis Illiac routine KSL 2.40 will be used to obtain a matrix of phi coefficients. KSL 1.11 will then be used to extract principal axis factors and will be followed by KSL 1.80 to rotate the factor matrix for orthogonal simple structure.

1710 Physics. Mössbauer Effect Integrals. The resonance absorption of gamma rays by nuclei bound in a crystal lattice with no recoil energy loss is known as the Mössbauer effect. Although experiments are simple, the interpretation of results is complicated by the presence of self-absorption of the emitted gamma rays in the source crystal itself. For a finite source, the probability of resonant absorption is given by

$$P(S) = \frac{f\Gamma}{2\pi}\int_{E=-\infty}^{\infty} \frac{dE}{(E+S)^2+\Gamma^2/4} \exp\left[-f'_a \eta \alpha t \frac{\sigma_0 \Gamma^2/4}{E^2+\Gamma^2/4}\right] \int_{x=0}^{\infty} dx\, \rho(x) \exp\left[-f'_s \text{ nax } \frac{\sigma_0 \Gamma^2/4}{(E+S)^2+\Gamma^2/4}\right]$$

where S = doppler energy due to relative motion of source and absorber,

Γ = natural line - width of the gamma ray,

f, f'_a, f'_s = fractions of the nuclei which undergo resonant absorption (these are complicated functions of temperature),

n, η = density of absorbing nuclei in source and absorber,

a, α = isotopic abundance of the given nucleus in the source and absorber,

t = absorber thickness,

σ_0 = cross section for gamma ray absorption by a nucleus, and

$\rho(x)$ = distribution function for emitting nuclei in the source, as a function of the depth x.

These integrals will be evaluated for the two limiting cases:

(1) Thin-absorber approximation:

$$\rho(x) = N \text{ atoms/cc} \qquad 0 \leq x \leq T$$
$$= 0 \qquad x \geq T \quad ,$$

(2) Thick-absorber approximation:

$$\rho(x) = \frac{2N}{\sqrt{\pi}} e^{-x^2/T^2}$$ (from a solution of the diffusion equation) .

1711 Agricultural Economics. Parametric Programming of Farm Plans. The purpose of this study is to examine the effect of resource changes on farms and farm plans, partly in the slowly permeable subsoil area in north central and northeastern Illinois. Also, the degree of price sensitivity will be examined with regard to the relevant products produced (i.e. corn, hogs, beef cattle, and dairy products). The results will be useful to those responsible for assisting farmers in making management decisions as well as providing basic knowledge in the area of production response to relative price changes.

The Illiac will be used to compute linear programming solutions for given sets of assumptions with respect to resources available and to price averages and ranges. Both resources and prices will be treated as parameters in this study.

1712 Loyola College. Analysis of Delinquency. Data have been collected on eleven variables: delinquency, race, education, rent paid, property ownership, substandard housing, overcrowding, vandalism, bravado, social rank, and urbanization.

The purpose of the problem is to extract centroid factors and to rotate these factors by Varimax.

1713 Psychology. Simple Structure Verification. A matrix of 111 personality tests into 28 centroid factors has been factor analyzed. Oblimax and visual rotation (Rotation Master) have been used to rotate 22 of these 28 factors to a simple structure position which is significant at the .001 level or better.

These results are to be extended by mapping the 22 factor solution on to 28 factors so that the positions of 6 "instrument" factors relative to 22 "personality trait" factors may be studied.

Two alternate methods of reaching the solution to the above problem are to be studied:

(a) By use of a new program for analytic rotation.

(b) By rotation to simple structure positions which are determined entirely by previous research in this area. This is an attempt to apply a multivariate "hypothesis" to the data which will then be tested for the fit of the data to the hypothesis.

1714 Sociology. Measurement of Occupational Values. This study is based on detailed questionnaire data from 2,674 medical students, constituting a probability sample of medical students in the United States. Two different scales were developed for measuring occupational values; and this project aims at (a) exploring the validity of each, and also (b) exploring the interrelations among occupational values with a view to developing indices of more general dimensions. The (a) part will consist of construct validity checks, based on the theoretical relationship between (1) the relation between a set of occupational values and a corresponding set of expectations of the degree to which these values can be fulfilled in a given specialty, and (2) the preferential ranking of that given medical specialty. The (b) part will involve the interrelationships among 22 Guttman directional scales.

It is hoped that this study, (a) and (b), will represent a contribution to the measurement of occupational values and also will further test hypotheses on the interrelations among occupational values, occupational expectations and occupational preferences.

The (b) part will involve 2 principal axes factor analyses, with both Varimax and Oblimax rotations on one. The (a) part will involve D and D^2 scores, separately for positive and negative cases as well as combined algebraic scores, for 10 sets of values – expectations over 6 occupations. It will also involve summary measures of agreement.

1715 Digital Computer Laboratory. Control Design for the New Illinois Computer. A small subcontrol is being designed to be tested as the forerunner of the control for the new machine. The bulk of the work will be the testing of logical designs for speed independence, using Q-5 and Q-3. In addition there will be some use of Sir Kittsolver to prove out actual schematic diagrams.

1716 Education. Transformation Analysis. It is desired to determine a measure of relationship between factors of two studies based upon different individuals (but having some variables in common). A solution to the problem which requires solving the matrix equation:

$$L_{12} = T_1'UM^{1/2}U'F_1F_2[(F_1'F_2)'(F_1'F_2)]^{-1}T_2 ,$$

has been developed recently where the matrices involved are of large order. The heaviest use of computational time occurs in finding U and M, the eigenvectors and eigenvalues of a certain quadratic form.

1717 T Psychology. Moral Judgments as Indicators of Superego. This phase of the research involves the development of a questionnaire to assess moral judgments or values of individuals, with neurotics in particular. From Freudian theory it is inferred that neurotics have higher values than normals while from Mowrer's position neurotics are assumed to have lower values than normal subjects. The data gathered from 100 students in Psychology 100 are to be analyzed for inter-item and sub-test consistency and for distribution of total test scores. The plan is to use product-moment correlations, means and standard deviations for the analysis.

1718 T Economics. Growth Model for Australia. The problem is an attempt to set up an econometric growth model for Australia and the Illiac will be useful in obtaining correlations.

The simple, least squares regression method will probably be sufficient.

1719 T Structural Research. Inelastic Response of a Multi-Degree of Freedom System subjected to a Specific Ground Shock. In this research a multi-degree of freedom system, consisting of springs and masses, is subjected to a specific type of ground pulses. The model of springs and masses can be considered as an approximation for a multi-story building, with the floors acting rigidly.

In the case of strong earthquakes, very high accelerations are experienced by the buildings. If the columns of these buildings act inelastically, the strength required for these columns can be reduced considerably. Further, from the experiences of strong earthquakes, it was observed that buildings designed this way with elastoplastic resistance diagram for the columns experienced only tolerable damage and the size of the columns could be reduced. So

it is desired in this case to develop a procedure to design the buildings accordingly.

However, the earthquake spectram for accelerations is an extremely random one and it is desired here to use rather simple acceleration pulses and find the design procedures, rather than to work with the earthquake spectra. So simple pulses only are to be considered in this case.

The equations of motion for each floor are to be integrated numerically.

1720 Chemistry and Chemical Engineering. Resistance-Density Correlation. Bridgman's density-resistance at high pressure data are to be correlated using a power series solution utilizing routines K-3 and L-2. This correlation is to be used to extrapolate to considerably higher densities. The equation

$$\frac{\gamma}{\rho} = A + B\rho + C\rho^2$$

is fitted to the experimental points by the least squares method, where ρ is the density and γ is the resistance.

1721 Psychology. Intercorrelation of Diagnostic Scores. The integrated study of therapeutic counseling is being completed this year. One of the more important aspects of this study is an investigation of the redundancy of commonly used psychodiagnostic instruments. To obtain data on the degree of information shared by such instruments, they are being intercorrelated. Many different variables are included in each such instrument, e.g. the Rorschach data include more than 143 variables, the Thematic Apperception Test more than 27, the Minnesota Multiphasic Personality Inventory more than 29. While not all possible intercorrelations are to be obtained, selected blocks have been chosen according to the nature of the instrument, e.g. objective with projective test, objective with objective test. On the basis of first results, additional blocks will be chosen.

A very small number of correlation matrices have already been run under problem 1474, which included this task as a part. However, it is desired to expand the number of such matrices in order to obtain more useful answers to the general problem described above.

1722 Institute of Communications Research. Semantic Measurement in the Study of Personality. This research grant covers a two year period beginning June 1, 1960. The purpose of this project is to extend the studies on the nature and measurement of meaning using Osgood's semantic differential technique into the specific area of personality.

The specific aims fall under the following headings: (1) development of a form of semantic differential for measurement in the personality area; (2) validation of this instrument in specific experimental situations and determination of its relations to various personality tests; and (3) investigation of individual differences in semantic factor structure and in the process of making judgments.

The first problem under this project, the development of the semantic differential form, involves having subjects rate several persons as concepts on a large set of scales drawn from the personality area. These scales will be intercorrelated for each concept as well as across concepts. These intercorrelations are to be factored, and rotations will be obtained. Existing library programs will be used for these computations.

1723 T Civil Engineering. The Effect of Surficial Layering on Earthquake Intensity. Strong motion earthquake accelerograms obtained at sites situated on various types and thicknesses of soil will be integrated to give particle velocity and displacement. Reasonable corrections will then be made to minimize instrumentation errors, and new accelerograms will be computed. With the new adjusted accelerograms, damped and undamped response spectra will be computed and analyzed.

Illiac will be used to integrate the original records and compute spectral values from the corrected records.

1724 T Economics. Seventh Degree Polynomials. The nature of this problem is to calculate the value of the net national income by the use of a seventh degree polynomial. Given the equation $a_7 y^{*7} + a_6 y^{*6} + \ldots + a_1 y^* + a_0 = 0$; y^* is to be determined. Also a_7, a_6 ... a_0 are to be calculated in solving for y^*. Each coefficient a will assume different values at different times.

1725 Coordinated Science Laboratory. This is a program for automatic decision making in, and monitoring of, a real time war game. During the course

of the game, the decisions made and certain other events are stored on the drum. Upon completion of a run information is brought from the drum and punched on tape in raw or processed form. P-16 is used to a limited extent in punching when decimal form is desired.

1726 Institute for Research on Exceptional Children. Predictor Selection. There are two main problems to be dealt with: to select the best battery of tests and/or subtests for the prediction of success in University High School; and to run a factor analysis on the subtests employed as predictors in University High School.

In addition, a comparison will be made of the predictive value of these tests for success in University High School versus their predictive value for success in the public schools.

1727 Structural Research. Analytical Studies of Curved Structural Members. This study is concerned with combined torsion and bending of curved structural members of closed thin-walled sections. Fundamentally, the problem is one of thin shells. Approximate procedures have been developed for determining the stresses and deformations in such members.

It is the purpose of this study to investigate by more exact methods of analysis the degree of approximation involved in the procedures. Original Illiac programs will be developed for some of this work.

1728 Theoretical and Applied Mechanics. Natural Frequency of a Beam. A standard finite difference technique is used to obtain a set of linear equations describing the vibratory motion of a missile-launching beam. The problem is to determine the lowest natural frequencies ω's of the beam, and the corresponding modes of vibration. These are obtained from the eigenvalues and eigenvectors of the finite difference coefficient matrix. The eigenvalues represent $\frac{1}{\omega_1^2}$, $\frac{1}{\omega_2^2}$, etc., and the eigenvectors X_1, X_2, etc., represent the ratios of the associated modes to a unit mode.

The Illiac Library Routine M-18 is used to compute the eigenvalues and eigenvectors of the finite difference coefficient matrix.

1729 Coordinated Science Laboratory. Air Traffic Control. Illiac will be used in conjunction with a sorting and tracking computer to simulate and

control air traffic in the civilian environment. The primary purpose of the work is to study the problem of control by an automatic device.

1730 T Chemical Engineering. Cannizzaro 1. The problem is to study the kinetics and mechanism of Cannizzaro reactions, a well known class of chemical reactions in organic chemistry, whereby certain aldehydes in the presence of concentrated base react to form corresponding acids and alcohols.

1731 Coordinated Science Laboratory. Studies in Adaptive Sampled Data Feedback Systems. This program is used in the study of a sampled data feedback system in which the parameters that characterize the system are functions of the input signals. These signals are, in general, perturbed by noise and are quantized in amplitude before they are fed to the system. Emphasis is placed on maximizing system performance by adjusting the form of the parameter dependence. This program is an outgrowth of earlier studies of the sorting and tracking of aircraft and should provide results that will be useful in this field.

The computer program simulates the system, generates the input signals, and evaluates performance in statistical terms.

1732 Coordinated Science Laboratory. Beam Pinch Field Calculation. This problem involves the calculation of the electric pinch field on a proton beam moving through a plasma. An integration routine is needed to calculate the field. Through variations in problem parameters, a time for establishing the pinch field is to be found.

Table I shows the distribution of Illiac machine time for the month of June.

TABLE I

	Hrs:Min	
Scheduled Maintenance	60:35	
Unscheduled Maintenance	24:57	
Drum Engineering	8:46	
R.A.R.	1:12	
Leapfrog	9:09	
Library Development	2:12	
Demonstrations	1:15	
Classes	1:06	
		109:12

Use by Departments

Aeronautical Engineering	1:04
Agricultural Economics	35:09
Agronomy	4:22
Animal Science	1:10
Bureau of Educational Research (PH-M1839)	:58
Bureau of Educational Research	14:54
Chemistry (NSF G-7336)	7:21
Chemistry (NSF G-5907)	1:44
Chemistry (Nonr 1834(13))	:41
Chemistry	30:06
Coordinated Science Lab.(DA36039SC56695)	79:09
Digital Computer Lab. (NSF G-9503)	17:00
Digital Computer Lab. (AEC AT(11-1)-415)	12:43
Digital Computer Laboratory	3:59
Economics (NSF G-7056)	:52
Economics	1:02
Education	5:17
Electrical Engineering (NASA-NSG 24-59)	2:10
Electrical Engineering (Nonr 1834(22))	3:45
Electrical Engineering (NSF G-7421)	2:17
Electrical Engineering (AF 19(604)5565)	1:02
Electrical Engineering (Iowa Grant 1955)	:30
Electrical Engineering (AF 33(616)6079)	:22
Electrical Engineering (DA-36-039-SC84525)	:18
Electrical Engineering	8:52
Food Technology (50-343)	1:18
Geology	:23
Institute for Res. on Except. Children	5:29
Institute of Communications Research	9:00
Institute of Labor and Indus. Relations	3:08
Liberal Arts and Sciences	1:53

(cont'd.)

TABLE I
(cont'd.)

Use by Departments

	Hrs:Min		
Marketing	3:02		
Mathematics (Carnegie Corp.)	1:35		
Mathematics	6:37		
Mechanical Engineering	1:16		
Medicine	1:03		
Mining and Met. Eng. (TRUS AF6770)	:07		
Petroleum Engineering	:07		
Physics (Nonr 1834(05))	19:51		
Physics (Nonr 1834(12))	:05		
Physics	1:32		
Psychology (Nonr 1834(11))	21:37		
Psychology (M-1733)	3:07		
Psychology (AF 49(638)371)	12:50		
Psychology	42:09		
Sociology	6:47		
State Geological Survey	1:07		
State Water Survey (DA-36-039-SC75055)	2:00		
State Water Survey	1:17		
State Department of Conservation	:12		
Structural Research (NSF G-6572)	5:14		
Structural Research (AASHO ROAD TEST)	:55		
Structural Research (Nonr 1834(03))	1:34		
Structural Research	50:37		
Theo. and Appl. Res. (NOBS 72069)	:13		
Theo. and Appl. Res. (DA-11-070-508 ORD 593)	1:13		
Purdue University	:57		
		445:02	
			554:14

Error Frequency and Analysis

The machine is normally used for "engineering" and maintenance between 7 a.m. and 10:30 a.m. Since the periods between 7 a.m. and 10:30 a.m. together with certain irregular periods, such as Saturdays and Sundays, are devoted to a heterogeneous group of engineering, maintenance, and laboratory functions, it is more instructive, from an error standpoint to look at the periods between 10:30 a.m. and 7 a.m. of the next day in order to make an observation of the error frequency in the machine. This is the actual period when the machine is designated for use, although certain engineering procedures

frequently require the scheduling of extra maintenance time. With this in mind, a summary table has been prepared using the period between 10:30 a.m. and 7 a.m. of the next day. This table lists the running time when the machine was operating, the amount of time devoted to routine engineering, the amount of time devoted to repairs because of breakdowns, and a number of failures while the machine was listed as running. Each failure was considered to have terminated a running period and was followed by a repair period in preparing this table. Since the leapfrog code is our most significant machine test, the length of time which it has been used on the machine is listed separately, together with the number of errors associated with that particular code. This information for the month is presented in Table II.

It is important to notice that, except during scheduled engineering periods, any interruption of machine time that was not planned is considered a failure in this table. In rare cases, where the failure is not known until a later time, it is possible that no repair period is associated with the failure. This over-all system has been adopted because it makes it possible for a machine user to estimate directly the probability that the machine will be "running" any instant of time and the probability of a failure during any given interval of running time.

Table III presents a summary of errors or interruptions for June.

TABLE III

Memory	4
Drum	4
Control	2
Punch	9
Reader	0
Scope	1
Unknown	1
Power Panel	1
Marginal Voltages (end connections)	4
Total	26

TABLE II

DATE	RUNNING OK TIME	REPAIR TIME	SCHEDULED ENGINEERING	INTERRUPTIONS OR FAILURES STOPPING OK TIME	TYPES OF INTERRUPTIONS OR FAILURES CAUSING REPAIR TIME	WASTED	LEAPFROG	FAILURES STOPPING LEAPFROG
6/1/60	15:34	5:56	2:30	3	(1) 2^{-9} memory (2) Drum failure (3) Control	:00	:40	0
6/2/60	9:46	11:38	2:36	5	(1) Drum failure (2-4) Marginal voltage trouble, Illiac (5) Control	:00	:40	0
6/3/60	21:44	:00	2:16	0		:00	:30	0
6/6/60	19:09	1:31	3:20	3	(1) Power panel (2) Unknown (3) Punch #1 erred	:00	:20	0
6/7/60	21:08	:00	2:52	0		:00	:20	0
6/8/60	20:52	:22	2:46	1	(1) Punch #1 erred	:00	:20	0
6/9/60	20:49	:00	3:11	0		:00	:20	0
6/10/60	20:41	:49	2:30	1	(1) End connections in Illiac bad	:00	:42	0
6/11/60	24:00	:00	:00	0		:00	:00	0
6/13/60	20:34	:15	3:11	1	(1) Punch #1 erred	:00	:20	0
6/14/60	20:35	:00	3:25	0		:00	:22	0
6/15/60	20:32	:00	3:28	0		:00	:00	0
6/16/60	19:27	1:04	3:29	2	(1) Memory 2^{-22} (2) Memory 2^{-22}	:00	:55	1
6/17/60	20:38	:52	2:30	1	(1) Punch #3 erred	:00	:20	0
6/20/60	23:07	:49	:04	2	(1-2) Punch #1 erred	:00	:20	0
6/21/60	20:20	:59	2:41	2	(1) 2^{-28} memory (2) Drum failure	:00	:20	0
6/22/60	21:08	:00	2:52	0		:00	:20	0
6/23/60	20:24	:18	3:18	1	(1) Punch #3 erred	:00	:20	0
6/24/60	22:17	:06	1:37	1	(1) Scope error	:00	:20	0
6/27/60	23:09	:00	:51	0		:00	:00	0
6/28/60	21:10	:41	2:09	2	(1-2) Punch #1 erred	:00	:00	0
6/29/60	22:13	:00	1:47	0	(cont'd.)	:00	:23	0

TABLE II (cont'd.)

DATE	RUNNING OK TIME	REPAIR TIME	SCHEDULED ENGINEERING	INTERRUPTIONS OR FAILURES STOPPING OK TIME	TYPES OF INTERRUPTIONS OR FAILURES CAUSING REPAIR TIME	WASTED	LEAPFROG	FAILURES STOPPING LEAPFROG
6/30/60	21:32	:31	1:57	1	(1) Drum failure	:00	:00	0
TOTALS	470:49	25:51	55:20	26		:00	7:52	1

PART VI

IBM 650 USE AND OPERATION

IBM 650 Usage

During the month of June specifications were presented for 15 new problems. This list does not indicate how the IBM 650 was used because large amounts of machine time may have been consumed by problems with numbers less than 118'. Numbers followed by T are for theses.

118' Theoretical and Applied Mechanics. Numerical Integration Method for Computing "Z". The problem is to compute the constant "Z", a term in the Winkler-Bach equation for determining the normal stress in a curved beam. "Z" is a property of the cross sectional area of the beam analogous to the moment of Inertia, and is to be computed by the 650 using the numerical integration method.

119' Animal Science. Derivation of Beef Cut Out Percentages. The data for this program consists of 7 cards per animal. The 7 cards contain 75 data fields. Using 50 of these 75 data fields, 88 items per animal will be derived. Each item involves a unique calculation; all calculations would be of the nature of a + b/d = item x or a - (b + c + d) = item y where a, b, c, and d are data fields from the existing cards.

Depending upon the magnitude of certain data fields, a particular animal would be put in a unique group, and the 88 items derived would be added to accumulated totals for that group. At the completion of the problem, means would be computed for each group.

The research problem as described above is the first step in a series of problems to attack the final statistical treatment involved. This portion is intended to produce usable results as a preliminary step. In addition the 88 items for some 200 animals are set up to provide essential screening of the data for human errors in the collection.

120' Chemistry. Magnetic Susceptibility of HF. The magnetic susceptibility of HF is to be computed using the SCF-LCAO-MO Wavefunction obtained at the

Molecular Structure Laboratory at the University of Chicago. Essentially, the IBM 650 is to be used to compute the pertubation matrix elements from the unit integrals.

121' Agronomy. Determining Optimum Plot Size from Uniformity Trial Data. Uniformity trial data consists of yields (and/or other data) from a large number of small plots that have all had the same treatment. Yields from the small plots are combined into larger plots of varying size and shape. The between plot variance is determined for each plot size and shape by analysis of variance. The optimum plot size may then be determined by different methods which utilize the between plot variances associated with different size plots.

The IBM 650 will be used to combine the original small plots into larger plots of varying size and shape as well as determining the between plot variance.

122' Theoretical and Applied Mechanics. Launcher Dynamics Study. The IBM 650 will be used to compute the eigenvalues and eigenvectors of a 10 x 10 non-symmetric matrix.

The motion of a beam with free ends may be characterized by an integral equation. If this integral equation is replaced by its finite difference approximation, a homogeneous set of linear algebraic equations with a non-symmetric matrix is obtained. The latent roots of this matrix yield the appropriate frequencies of oscillation, and the corresponding eigenvectors are the modes of oscillation.

Missle launchers consist of a group of interconnected structural components like rods, beams, and plates. During the period which the missile is on the launcher the missle subjects the launcher to a harmonic shaking force. It is necessary that the frequency of this shaking force be different from the natural frequencies of the structure. The purpose of this computation is to compute the natural frequencies of the missile and structure to compute these frequencies and thereby assess the design of the system.

123'T Bureau of Educational Research. An Experimental Study in the Learning of Mechanical Principles in the Area of Physics. In this study the Direct-Detailed and Directed Discovery Methods of teaching principles of mechanics are being compared experimentally. Not only are comparisons made between the two

basic treatments, but order and sequence of method is also an important consideration.

The statistical treatment involves an analysis of variance, factorial design. The two experimental groups for the first treatment are split into four experimental groups for the second treatment and subsequent testing sessions. A control group is maintained throughout the study, making a fifth group.

Computations to be done include:

1. Sums of scores, sums of squares, sums of deviations, means, variance standard deviations, covariance and adjusted covariance terms by sex, level and treatment for each of the criterion measures.
2. Totals of each of the statistics above by sex, level and treatment.
3. Intercorrelation matrices for all scores by total of sex (male and female), levels (1, 2, and 3) and experimental treatments (AA, AB, BB, and BA).
4. The control group will not be included in totals by sex and level, <u>but should be handled separately at all times</u>.
5. Analysis of variance for each of the 8 criterion measures.

124' Civil Engineering. Computation of Time Dependent Deflections in Prestressed Concrete Beams. The purpose of this program is to compute time dependent deflections in reinforced concrete beams. This is accomplished by a numerical solution of the integral:

$$C = \int_{t_1}^{t_2} f_c \frac{dc}{dt} \, dt$$

where

C = Total creep strain between t_1 and t_2,

c = Unit creep strain,

f_c = Concrete stress.

The solution of this problem is done by a step-by-step integration. It consists of a single loop which is repeated n times and gives n lines of answers. The program starts with the initial stresses in the concrete and computes the creep strains for the first increment. It then computes the change in steel stress caused by this change in strain and sets the initial

stresses for the next increment. Angle changes are computed from the computed strains and are printed in the output. The angle changes are then multiplied by a constant to get deflections and the deflections are printed in the output.

Input consists of one card for each beam and one card for each set of creep data. Output consists of n lines of print for each set of creep data. For this investigation n will range between 2 and 50.

125' State Water Survey. Radar Echo Height Frequency Analysis. Radar echo heights over a 400 county network in central Illinois will be examined to determine the maximum height frequency distribution within each county. The frequency distribution is determined by counting maximum height over each county during approximately two minute intervals during storm durations of approximately one hour. Analyses of approximately twenty storms are contemplated.

126'T Agronomy. Uniformity Trial on Corn Hybrids. In analyzing uniformity trial data yields from a a large number of small plots, having the same treatment, are combined into larger sizes and shapes. The analysis of variance is then determined for each different size and shape of plot. The optimum plot size is then determined by various means using the variances associated with these various sizes and shapes of plots. The IBM 650 will be used to compute the analysis of variance for these different sizes of plots.

127' Bureau of Educational Research. An Experimental Study in the Learning of Complex Technical Material. This study involves a factorial design and an analysis of variances. There are four experimental groups and a control. Each treatment is balanced for juniors and seniors, and males and females in each of three ability levels. Criterion measures were obtained immediately after the learning session, one week and five weeks later. Various rating scales were obtained at each session as being relevant.

Computations to be carried out include:

1. Sums, sums of squares, sums of deviations, means variance and standard deviations for each class by level and treatment, as well as totals by class, treatment and level for each criterion measure; including covariance and adjusted covariance term.

2. Complete intercorrelation matrices for all scores by total (1), by treatments (4), by sex (2), by class (2), and by level (3).
3. Control group, treatment 5, to be computed as a separate group at all times. Never included in totals with other treatments, but to have all routines performed separately.
4. Analysis of Variance:
   a. All analyses of treatments made by pairs. The four treatments 1, 2, 3 and 4 yielding 6 analyses of: 2 treatments x 3 levels x 2 classes. To be performed on 15 criterion measures.
   b. Treatment 1 is to be combined with 3 and 2 is combined with 4 to make two new treatments for a further analysis of variance.

128' Psychology. Questionnaire Factors in Sexual Deviates. The problem involves a multiple discriminant analysis of 4 groups and 16 variables per subject. Standard methods have been translated into matrix rotation. An IBM 650 routine has been prepared which forms from raw data the matrices required for this analysis. 24 expressions must be calculated each in the following form:

$$F_i C^{-1} m_j^t - \frac{1}{2} m_j C^{-1} m_j^t \ell_i^t \qquad \begin{array}{l} i = 1, 2, 3, 4, 5, 6 \text{ groups} \\ j = 1, 2, 3, 4 \text{ population} \end{array}$$

where the m_j are vectors of mean scores, the F_i are raw score matrices, the ℓ_i are unit vectors, and C is a variance-covariance matrix (within groups).

129'T Civil Engineering. Design of Prestressed Beams. This problem, of which only a portion can be done on the IBM 650, involves a study of how existing principles may be applied to the design and analysis of prestressed steel beams. The IBM 650 will be used to provide basic calculations so that the moment-rotation curves for various beams and various values of eccentricities, span lengths, cable sizes, prestressing forces, and other parameters can be obtained. In addition three values of ultimate moment corresponding to three different theories will be obtained.

130' Chemistry. Alkali Halide Properties. The problem consists of an attempt to calculate the overlap contribution to the quadruple coupling constant of alkali halides (e.g. KCl). Hartree-Fock wavefunctions are employed, expanded by numerical integration from one center about the other and the final integrals are again evaluated by numerical integration.

131' Electrical Engineering. Digital Load Flow Study. When dealing with A.C. power networks of the type operated by power companies, involving power generating stations, transmission lines and different types of loads, it becomes necessary to perform studies in order to determine the operation of the network as loads increase, to establish the best operating procedures during normal and emergency conditions, and to set up plans for future expansions.

In general, several or all of these studies are combined and data is taken to cover all the required operating conditions. The collection of the data becomes what is called a "load flow study" in which all the required information (generation, voltages, line flows, losses, etc.) is obtained by finding the solution of the network under various conditions of loading, generation and connections.

Since this type of problem would require a great amount of time if calculated by hand, extensive use has been made of network analyzers. A network analyzer is essentially a group of power sources and impedances which are connected so as to provide a scaled representation of the power system. The different quantities can be measured directly from the network.

The purpose of the problem whose specifications are presented here is to obtain the solution for bus voltages, currents and flows in the lines of an A.C. power transmission network on a digital computer.

The basic program to solve this type of problem has been already prepared. The work to be done on this problem refers to the optimization and simplification of the program, the addition of some desirable features such as taking into account the presence of transformers and tap changers between buses, the reduction of the amount of data required as input and the investigation of the effect of applying acceleration factors to improve convergence of the iterative type of solution used in the problem.

This is the type of program which in practice might be used by people who have no experience with computing, either at the University or

outside. Preparation of input data appears to be simpler in punched card form for those not acquainted with computing equipment.

The main application of the program will be in planning studies and design of power systems which could mean that it would be used mostly by power companies and engineering firms. Most of those companies have access to medium-speed computers of the type of the IBM 650 rather than to computers of the type of the Illiac. Consequently, in order to include all the requirements of the problem in its practical application and also in order to be able to compare the results with those of others investigating the same problem, it was decided to use the IBM 650 computer.

The following constants and terminal conditions are fixed and considered as input data for the problem:

Constants: Impedances of the lines.

Terminal Conditions: Two types of buses (nodes are defined, generator buses and load buses. Two quantities are fixed at each generator bus. One bus, called "swing generator" has its voltage magnitude and its phase angle fixed; this voltage is used as reference for the rest of the network. Voltage magnitude and power output are the quantities fixed at the other generators.

The fixed terminal conditions at the load buses are the real and reactive power taken from the network at that point.

Other information required: means of indicating to the computer what type each node is (generator or load), a connection matrix and the ratio of transformation if transformers are connected between buses.

All voltages, currents and flows are complex numbers and are handled during the computation either as a real and an imaginary part, or as a magnitude and a phase angle.

The solution of the network is obtained by means of an iterative procedure which can be described as follows:

1) A voltage (magnitude and angle) is assumed at every bus where it is not fixed.

2) The real power and the reactive power, P_k and Q_k are calculated at each bus (based on the nodal type of solution for networks):

$$P_k + j\,Q_k = \overline{E}_k\,\overline{I}^*_k$$

where $\overline{I}^*_k$ is the conjugate of the total current into the node as calculated from

$$\overline{I}_k = \sum_{m=1}^{n} \overline{E}_m \overline{Y}_{km}$$

where $\overline{Y}_{km} = - \overline{y}_{km}$ (negative of the admittance of the branch connecting buses k and m), for $k \neq m$.

For $k = m$

$$\overline{Y}_{kk} = \overline{y}_{k0} + \overline{y}_{k1} + \overline{y}_{k2} + \ldots\ldots + \overline{y}_{kn} \quad .$$

The P_k and Q_k calculated for the bus are calculated with the scheduled P_k and Q_k.

$$\Delta P_k = P_{k\ sched.} - P_k \quad ,$$

$$\Delta Q_k = Q_{k\ sched.} - Q_k \quad .$$

Corrections for the voltage magnitude (ΔE) and the phase angle ($\Delta\delta$) are obtained by means of a set of equations derived by differentiating the expressions for P_k and Q_k with respect to E and δ.

No corrections are necessary at the swing generator.

Only correction in the phase angle is necessary at the generator buses since the voltage magnitude is fixed.

Corrections in both magnitude and angle are necessary at the load buses.

As soon as the corrections are calculated, they are applied to the bus voltage and/or angle and the calculations started at the next bus (using the new value for the voltage just corrected) until all the buses have been covered. This completes one iteration step. The iterations are repeated until the desired precision has been reached.

The process can be made to converge faster if an acceleration factor is used, that is, if the corrections are multiplied by a constant before they are applied. The optimum value of the acceleration factor seems to depend on the type of network. The acceleration method is one of the subjects remaining to be studied.

After having obtained the correct voltage at every bus, line currents and line flows can be easily calculated.

The output of the program is a tabulation of bus voltages, total real and reactive power at generators and loads, and line flows and currents.

132' Chemistry. Calculation of Electron Transfer Rates. The problem consists essentially in the calculation of electron transfer rates from the experimentally measured values of electrolysis currents under conditions of controlled potential and minimum concentration polarization. Because of the large amount of experimental data which must be entered into the theoretical equations and because of the absolute necessity for using a floating point facility, the IBM 650 is the logical choice of machine.

Table I' shows the distribution of the IBM 650 machine time for the month of June.

TABLE I'

		Hrs:Min	
Scheduled Maintenance		15:33	
Unscheduled Maintenance		18:51	
Library Development		5:02	
Log Summation		:57	
Classes		7:20	
Civil Engineering 297	:12		
Civil Engineering 391	:28		
Math 295	6:27		
Math 395	:13		
Wasted		20:04	
			67:47

Use by Departments

Animal Science		:51	
Agronomy		7:10	
Chemistry		13:47	
Digital Computer Laboratory		1:53	
Graduate College		15:50	
Nuclear Engineering		1:51	
Physics		1:13	
Psychology		3:55	
State Water Survey		5:04	
Statistical Service Unit		100:48	
Animal Science	1:23		
Bur. of Ed. Research	10:03		
Bur. of Inst. Research	14:45		
Bursar's Office	10:26		
Business Office	6:09		
DHIA	26:32		
Dairy Science	1:47		
Education	6:36		
Horticulture	:28		
Min. and Met. Engr.	4:49		
Psychology	1:02		
Student Counsel. Service	16:48		

(cont'd.)

TABLE I'
(cont'd.)

Use by Departments

	Hrs:Min		
Structural Research	4:33		
Theoretical and Applied Mechanics	3:54		
		160:49	
			228:36

Error Frequency and Analysis

The IBM 650 is normally on from 8 a.m. to 5 p.m. The machine is used for preventive maintenance from 8 a.m. to 12 noon on Mondays.

Table II' gives the daily breakdown of machine time with respect to wastage and unscheduled maintenance.

Table III' presents a summary of errors for June.

TABLE III'

Core		4
Tape, Tape Units, or Tape Control		44
Timing of program suspected	2	
Refused to do 04 orders at random point in program unless set up in storage entry	1	
Read good tape incorrectly	1	
Refused to obey 04 orders unless program start key pressed	7	
Suspect the tape - all errors on one tape	31	
Dumped tape in vacuum on rewind	1	
Tape control lights all off when should be on	1	
Card jam in 533		1
407 On-line		5
Distributor		1
Floating Point		4
Table Look-up Circuits		4
Unknown		4
	Total	67

DATE	RUNNING OK TIME	SCHEDULED ENGINEERING	REPAIR TIME	WASTED	FAILURES STOPPING OK TIME	TYPES OF FAILURES CAUSING REPAIR TIME
6/1/60	7:39		4:26	:09	2	(1) Not reading into core (2) Multiple bits in core
6/2/60	13:32		2:15	:10	1	Nothing would run - no cause found
6/3/60	9:58		:00	:20	1	Read and write troubles on all tape units
6/5/60	1:45		:00	:45	2	(1) Standard dump program hung up (2) Tape units working improperly
6/6/60	3:04	4:08	1:04	:44	2	(1) Refused to obey tape orders (2) Refused to read into core
6/7/60	7:37		1:15	:11	2	(1) Card jam in 533 (2) Found broken selector clutch dog on 407
6/8/60	8:38		:00	:25	0	
6/9/60	8:03		:36	:21	2	(1) Distributor would not clear (2) 407 on-line printed * instead of 1 in word 8
6/10/60	9:22		:00	:58	0	
6/11/60	1:31		:00	1:04	0	
6/12/60	1:45		:53	:52	1	Could not clear anything in core manually
6/13/60	8:51	3:40	:00	:49	3	(1) Couldn't read SOAP from tape correctly (2-3) Blank and multiple bits in UA.
6/14/60	5:27		3:21	:17	2	(1-2) Blank bits in UA
6/15/60	8:32		:00	:38	0	
6/16/60	12:23		:00	:10	38	(1-7) Stopped on 04 8012 for no apparent reason (8-38) Read failures on unit 2
6/17/60	8:35		:00	:35	1	Tape unit 2 dumped tape into vacuum tubes
6/20/60	2:33	3:58	2:26	:03	4	(1-2) Hang-up on 84 1070 1555 (3-4) Hang-up on 84 1056 1555
6/21/60	8:13		:00	:49	0	

TABLE II' (cont'd.)

DATE	RUNNING OK TIME	SCHEDULED ENGINEERING	REPAIR TIME	WASTED	FAILURES STOPPING OK TIME	TYPES OF FAILURES CAUSING REPAIR TIME
6/22/60	7:48		1:06	:12	3	(1-2) 407 on-line print wheel 41 word 4 dropping character (3) Tape control lights not working
6/23/60	8:31		:46	:15	1	407 dropping characters on-line
6/24/60	7:07		:00	1:53	1	Program hanging up on X6'-punched out cards
6/27/60	3:52	3:47	:00	1:21	0	
6/28/60	5:53		:00	3:07	0	
6/29/60	5:33		:00	3:32	0	
6/30/60	7:56		:43	:24	1	Instead of power coming all the way up, the relays kicked out
TOTALS	174:08	15:33	18:51	20:04	67	

PART VII

GENERAL LABORATORY INFORMATION

Personnel

The number of people associated with the laboratory in various capacities is given in the following table:

	Full-Time	Part Time	Full-Time Equivalent
Faculty	9	2	10.5
Visiting Faculty	2	-	2.0
Research Associates	1	-	1.0
Graduate Res. and Teaching Assts.	-	-	22.1*
Graduate Fellows	2	-	2.0
Administrative and Clerical	5	-	5.0
Other Nonacademic Employees	29	2	30.0
Totals	48	4	72.6

* This is an average figure based on the total working time of research assistants for the month.

The Laboratory Advisory Committee consists of Professors H. C. Brearley, L. D. Fosdick, D. B. Gillies, B. H. McCormick, G. A. Metze, D. E. Muller, T. A. Murrell, W. J. Poppelbaum, J. E. Robertson and J. N. Snyder.

UNIVERSITY OF ILLINOIS

GRADUATE COLLEGE

DIGITAL COMPUTER LABORATORY

TECHNICAL PROGRESS REPORT

PART I - HIGH-SPEED COMPUTER PROGRAM

PART II - CIRCUIT RESEARCH PROGRAM

PART III - MATHEMATICAL METHODS

PART IV - ILLIAC USE AND OPERATION

PART V - IBM 650 USE AND OPERATION

PART VI - GENERAL LABORATORY INFORMATION

July, 1960

PART I

HIGH-SPEED COMPUTER PROGRAM

This work is supported in part by Contract No. AT(11-1)415 of the Atomic Energy Commission and in part by the University of Illinois. Contract No. AT(11-1)415 is supported jointly by the Atomic Energy Commission and the Office of Naval Research.

A. Logical Design

The logical design for the division predictor and the associated subtractor for quotient recoding has been completed. Since the normalization detector and the division predictor now share the most significant bits of the A-adder output, it is necessary to restore these outputs to achieve sufficient fanout. Under this arrangement, it is cheaper to use two predictor circuits (one for each adder) instead of one circuit with a selected input as previously planned. The cost in terms of transistors for the prediction circuits, subtractor and M-register normalization detector are given below.

	No. of Transistors
Prediction Circuits	327
Subtractor and Q-R End Connections	76
M-Normalization Detector	14
	417

The total of 417 transistors does not include the cost of control logic nor does it take into account possible overlaps with addition and multiplication logic.

Control sequence charts for division and integer division were also completed. It was found that the integer division control sequence is not easily integrated with the ordinary division sequence. A slightly different division scheme which requires a conditional gating of 1's into Q is also under study. The control sequence for this scheme may be more easily integrated with the corresponding control sequence for integer division.

Both a speed-independent and a non-speed-independent adder have two collector delays in the worst case with a fanout of 3 at each output. This design costs 890 transistors, including the checking OR circuits and clear

gates, but excluding facilities for entering and leaving the adder. The non-speed-independent design also has two collector delays but with a fanout of 5 at each output. The transistor cost in this case is 230, excluding the registers required for entering and leaving the adder. Unless a slower adder is acceptable, it seems that space limitations dictate the use of the non-speed-independent adder.

(John O. Penhollow)

Control Design

The Eccles-Jordan and C-Element subcontrols mentioned in the June report have been compared and the Eccles-Jordan subcontrol has been selected as the one most desirable. The specific results of the comparison are given below:

Aspect Compared	This aspect of the C-Element subcontrol was _____ than that of the Eccles-Jordan subcontrol
a. Component cost for the scale-of-two counter	25 per cent higher
b. Component cost for the control logic	13 per cent higher
c. Component cost for both the control and the counter	17 per cent higher
d. Average time to open and close one gate	10 per cent higher

n addition to these specific comparisons, a control using Eccles-Jordan memory lements has one additional advantage over one using C-elements due to the ifferent manner in which the two memory elements change state. When the C-lement is in transition from one state to another, both the "1" and the "0" utputs change simultaneously. There is no way of predicting which output will hange first. In the case of the Eccles-Jordan, however, only one of the oututs is excited at a time and the second becomes excited only after the first as completed its change. In addition, knowing the state of an Eccles-Jordan, he can always predict which output will change first in its next transition. his feature permits one to use both outputs of an Eccles-Jordan memory element n a speed independent circuit design, whereas only one of the C-Element outputs an be used.

As a result of these comparisons, the Eccles-Jordan subcontrol was chosen as most desirable and it will be built and tested. Both the transistor layout and the chassis wiring diagrams have been completed and construction will begin immediately.

(Robert E. Swartwout)

Basic Circuits

In addition to the simple Eccles-Jordan Flipflop mentioned in the June report, two more Eccles-Jordan memory elements have been designed. A summary of the logical characteristics of these elements is given in Figure 1. It will be noted that the two new elements [(a) and (b)] both give replyback signals. That is to say, R = 0 only after both inputs have gone to zero and R = 1 only after all the inputs and outputs agree with the truth table. In speed-independent circuit design, R = 1 means that an input condition to the memory element has been stored, and R = 0 means that the stored state cannot change.

Each of these circuits has a standard input current requirement; however, the voltage drive required is nonstandard. The voltage drive required and the fanout obtainable from these memory elements is given in the following table:

	(a) Simple Eccles-Jordan	(b) Eccles-Jordan with nonrestored Reply	(c) Eccles-Jordan with Restored Replyback	
a. $\lvert V_{in} \rvert$ required	$\geq$ 0.75 volts	$\geq$ 1.21 volts*	$\geq$ 1.05 volts	
b. Fanout of O_i	5	2.6	3	
c. Fanout of R	---	2.	5	10
d. Transistors Used	6	8	11	12
e. Diodes Used	14	23	26	26
f. Stabistors Used	3	4	6	6
g. Resistors Used	21	27	36	38

*Since this replyback output is a nonrestored signal, the output voltage is a function of the input voltage. With this input voltage the replyback signal will be 0.90 volts.

(Noel H. Johnson and Robert E. Swartwout

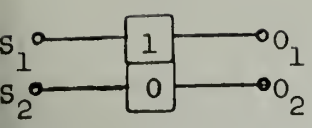

imple Eccles-Jordan

(a)

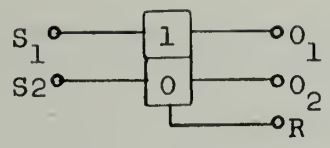

Eccles-Jordan with
Nonrestored Replyback
(b)

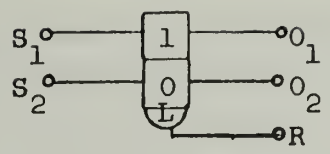

Eccles-Jordan with
Restored Replyback
(c)

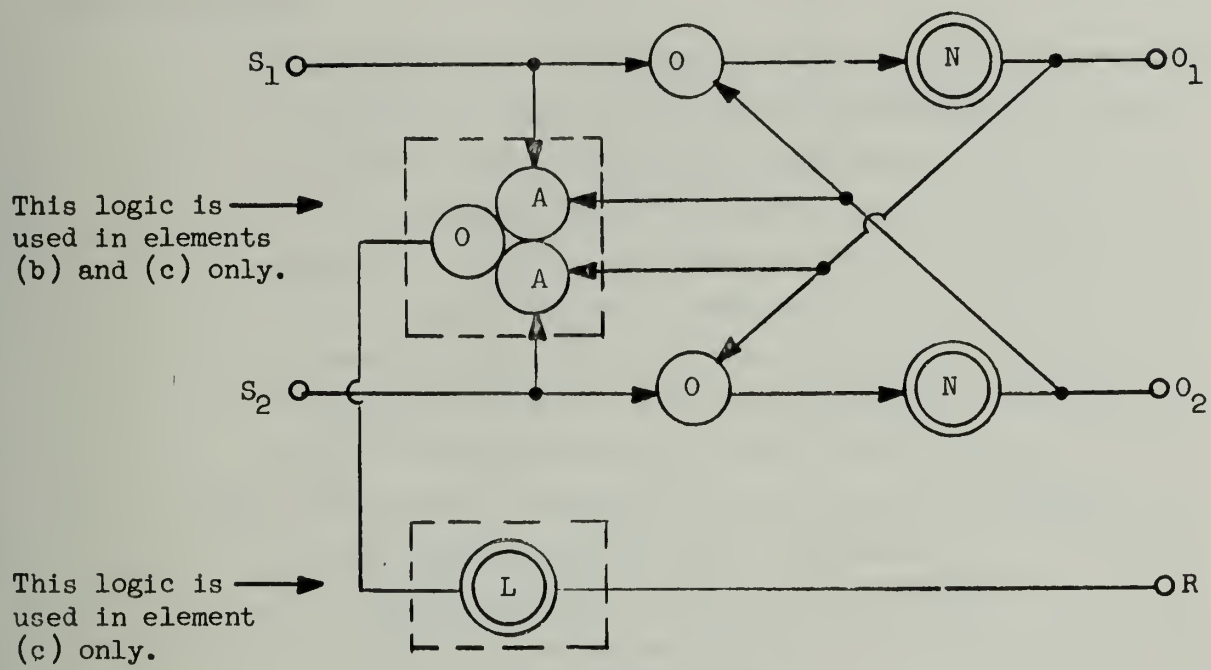

Logical Equivalent of Eccles
Jordan Memory Elements
(d)

S_1	S_2	O_1	O_2	R
0	0	Memory State		0
0	1	1	0	1
1	0	0	1	1
1	1	0	0	0

This is considered to be a disallowed state for the elements with replyback signals whenever the indicated action of R (for this state) is inconsistent with the remainder of the logic.

Truth Table for Eccles-Jordan Memory Elements
(e)

Figure 1

D. Core Storage Unit

The memory sense amplifier tolerance calculations have been completed using P. S. #1206 on Illiac. First calculations indicated minor circuit component value changes which have been accomplished, and calculations based on the final values have been completed.

(John Muerle)

Memory Test Model

A 64-word model of the core memory has been constructed in order to:

(1) Evaluate construction and physical layout both of the individual chassis and of the core memory as a whole (i.e., placement and interconnection of the plug-in chassis). It should be noted in the latter respect that the placement of drivers near the core stack is unusually difficult due to the large number of them, the power dissipation and cooling problem, and the magnitude and rise time of the currents involved.

(2) Evaluate more thoroughly the electrical performance of the system with particular reference to:

(a) Change of type of magnetic cores (from RCA to Telemeter Magnetics).

(b) Use of larger number of current drivers than has been previously assembled.

(c) Use of a nearly complete control section.

The logical diagram of the test memory is negligibly different from that of the full scale memory of DWG. L-916. In the test memory, the address to be operated on is produced by a 6-bit counter (not shown).

The magnetics of the test memory consists of one complete core plane (64 words with magnetic switches) and 2048, 3-bit words (without switches) which correspond to 3, full-length digit-sense lines. The 3 bits which operate on full-length lines are used as 1 information, 1 parity, and 1 strobe derivation bit (See Report No. 91).

The test memory uses 64 X Drivers and 2 Y Drivers (DWG M-896), 10 Digit Drivers (DWG M-895), 3 Sense Amplifiers (DWG M-889), 4 Timers of the type shown in DWG. M-893, and one quadrant of the Decoder (DWG. XL-918), in addition to miscellaneous control circuitry and the 6-bit counter previously mentioned. Thus, each unit of the full memory is represented.

The 13 chassis of the test unit are in a frame of the same size and shape and located in the same positions as is proposed for the full memory. Thus, the problems of inductance of leads, use of coaxial cable interconnection, etc., are, it is believed, accurately duplicated.

(B. E. Briley, J. L. Muerle, S. R. Ray

Auxiliary Storage

A discussion of some of the factors affecting over-all data rate on the Ampex FR-300 magnetic tape unit is being prepared. In particular, the effect of block size, number of tape channels, packing density, and tape speed is being considered. Some of the increase in average data rate expected at higher tape speeds is lost due to increased start-stop distances, hence increased spacing between blocks.

(R. L. Cummins)

The optimum number of tracks for magnetic tape depends in part on the redundant code which is used to increase reliability. (See "Memorandum on Tape Format and Redundant Codes", by H. C. Brearley, File 326, July 22, 1960). A code of the Hamming type is being constructed which will have enough 1's in each correct tape character to allow recovery of a clock pulse in the presence of double dropouts.

(H. C. Brearley and C. N. Liu)

The FR-300 remote control equipment has been modified to permit automatic dropout measurements during unattended operation.

(L. J. Peek, Jr.)

Measurements were made of the FR-300 static skew. It was found to be larger than the manufacturer's head alignment tolerances allow. This may be due to the inadvertent disassembly of the head on two occasions in the past.

Start and stop times were measured as a function of various adjustments. This information will be helpful in writing specifications for new tape transports. The tests are continuing.

(M. D. Freedman)

F. Control Design

A design study was completed which compared the arithmetic control complexity for an order code forming an extension of the floating add scheme proposed by D. E. Muller in File No. 311, and for an order code following a simplification of the addition scheme proposed by D. J. Wheeler in Report No. 92. The Wheeler scheme was found to require no more control equipment, mainly because normalization was considerably simpler, and there were fewer exponents to be computed in the exponent arithmetic unit. The decision was made to retain the simplified Wheeler scheme.

(D. B. Gillies and R. R. Shively)

PART II

CIRCUIT RESEARCH PROGRAM

(Supported in part by the Office of Naval Research under Contract Nonr-1834(15).)

1. Summary of July Work

Again the emphasis was placed on testing flow-gating as a system, and it is now felt that an operational system is available which can be built into the AU of Illiac II without encountering electrical or geometrical difficulties. Preliminary results were obtained with the low impedance two-wire system mentioned in the progress report for May, 1960. Furthermore, theoretical work has been carried out on both tunnel diode and transistor switching theory.

2. Flow-Gating Send-Driver

Figure 1 shows the new flow-gating send-driver. Since the complementary version (N-101) of the standard flow-gating transistor is available, the design has become more elegant. It is to be noted that the output to the flipflops is a direct current output. Referring to Figure 1 of last month's report, it is seen that under "don't send" conditions, the collector of the right-hand transistor T_1 is pushed against the -5V bump independently of the state of the flipflop. As a consequence, the output emitter-pullover T_2 is cut off. As soon as the send-driver stops pushing current into the circuit, the base of T_2 is free to follow the state of the flipflop. If T_1 does not conduct D-1 provides a negative bumping voltage which appears at the emitter of T_2, i. e., on the bit-line.

(H. Guckel)

3. Speed Tests of Flow-Flops

The flow-flops were tested as a free running system. The average speed, i. e., free operation time, was computed to be 21.9 MC. Since this is about one-fifth of the cut-off frequency, the speed may be called satisfactory. In connection with these tests, the properties of a ring of flipflops was determined. It was verified that waveforms are not identical

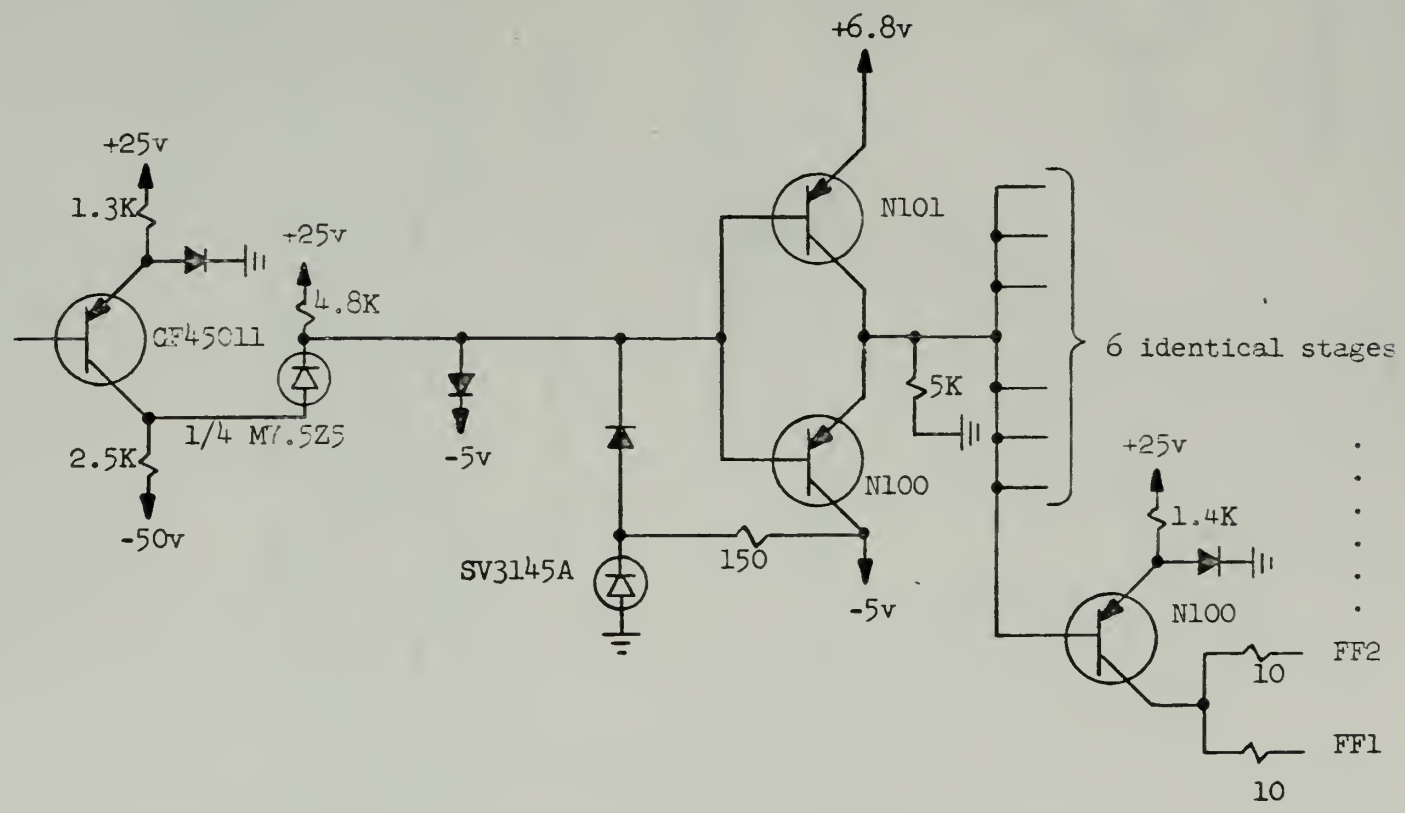

FIGURE 1. Flow Gating Send Driver (+ input ⟶ "don't send" condition)

at similar points in the ring, i. e., the ratio of up-time to down-time of the waveform is a function of position, the time to set "0" and the time to set "1". The details are in the final report on flow-gating.

4. Low Impedance Two-Wire System

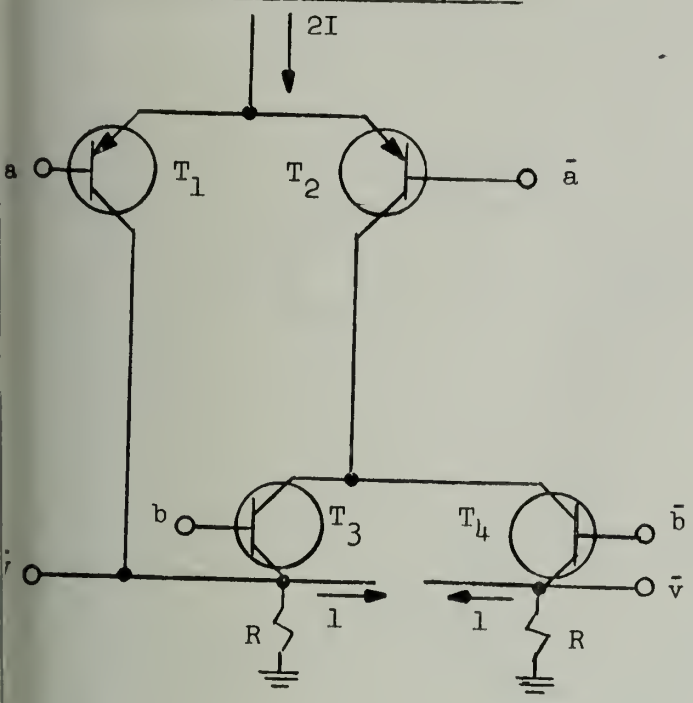

a	b	v	$\bar{v}$
1	1	RI	-RI
1	0	-RI	RI
0	1	-RI	RI
0	0	-RI	RI

(Assuming $\alpha = 1$)

FIGURE 2. Two-Wire AND Circuit.

The only AND circuit (which can be used as an OR circuit at the same me) discovered so far using difference amplifiers only is shown in Figure 2. uses a series connection of two difference amplifiers. One of the interest- g features of the difference amplifier system is that the OR function can be ob- ined by exactly the same circuit as the AND circuit. This fact can be under- ood by a simple calculation.

In the AND circuit we have:

$$f = ab$$

$$\bar{f} = \overline{ab}$$

e, if "a" and "b" are replaced by "$\bar{a}$" and "$\bar{b}$" respectively (and therefore nd $\bar{b}$ are replaced by a and b respectively),

$$f = \bar{a}\bar{b} = \overline{a \vee b}$$

$$\bar{f} = \overline{\bar{a}\bar{b}} = a \vee b$$

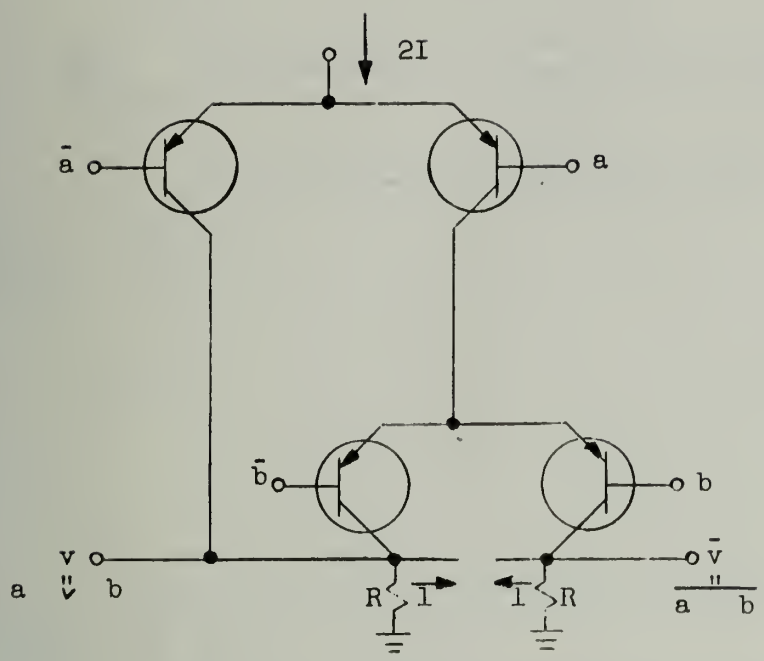

a	b	v	$\bar{v}$
1	1	RI	-RI
1	0	RI	-RI
0	0	RI	-RI
0	0	-RI	RI

(Assuming $\alpha = 1$)

FIGURE 3. Two-Wire OR Circuit

Using the GF-45011 transistor AND and OR circuits have been tried experimentally. Figure 4 shows the experimental circuit.

The observation shows that the time delay of this two-input AND (or OR) circuit is about 5 mμs. The estimated time delay per difference amplifier is about 3 mμs (assuming a base-overcurrent of 10 ma) and the experimental value agrees well with this estimate. Because of the series connection of the transistors, the major part of the time delay is determined by 2 x base delay 4 mμs. This, of course, means that n-input ANDs with n big are very slow.

One of the good characteristics of this difference amplifier system is that the output is simply determined by the constant current I, the α of the transistors and the collector load R. Because of this, the waveform of the output voltage is very clean.

(C. Afuso)

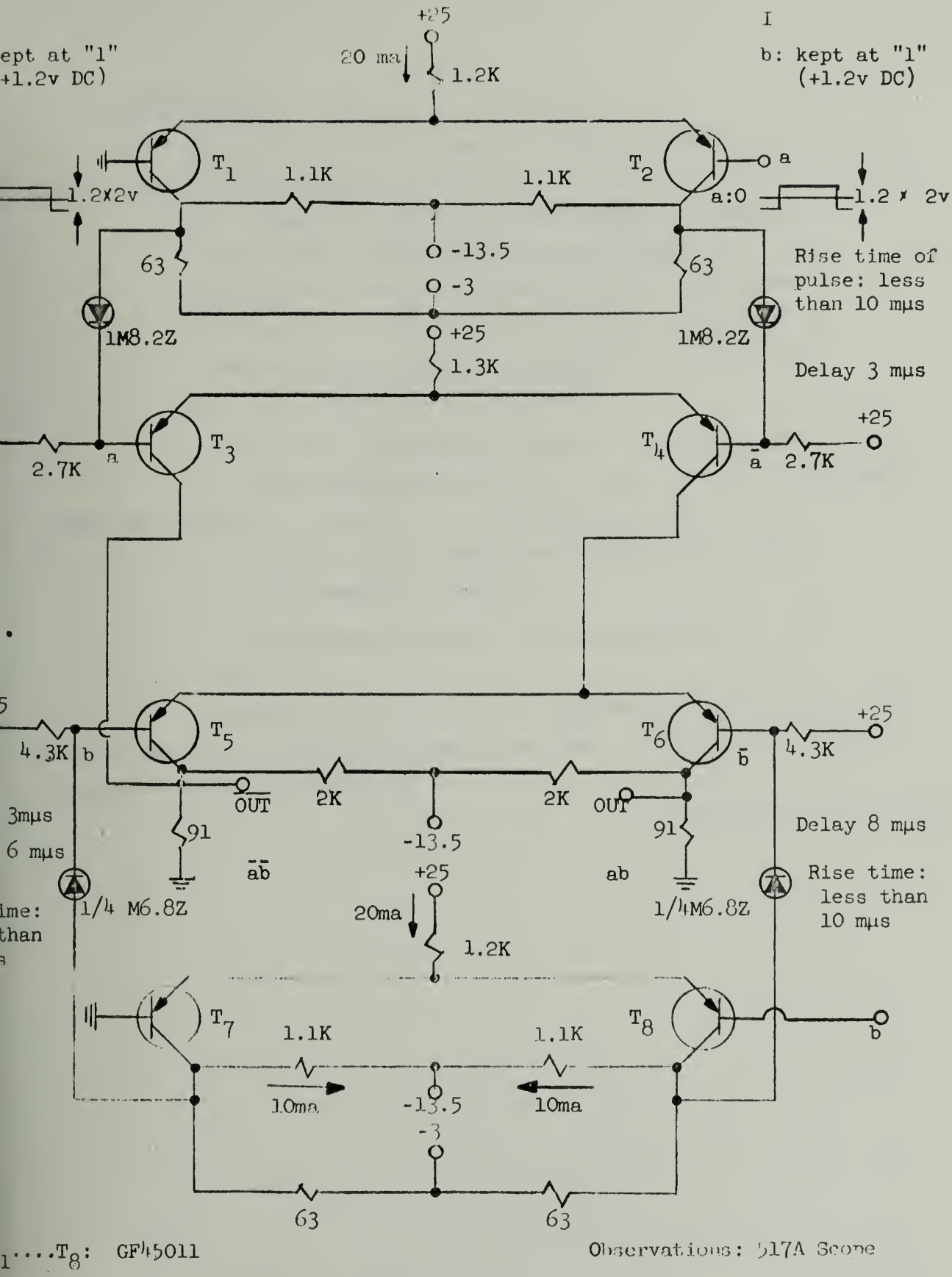

FIGURE 4. Experimental AND Circuit Using Difference Amplifiers.

5. Switching Theory

Work has been carried out on a more exact transistor switching theory. The basic ideas are as follows:

1. A passive circuit exists before the α-generator is activated. This causes passive feedthrough of the wrong phase. Since the depletion layer capacitance is reverse-polarized, the junction has to be swept clean before the active circuit gives the desired output. This means additional delay.

2. r_b cannot be neglected without giving large errors.

The theoretical analysis of the transient behavior of tunnel diodes was brought to a close. The conclusions are that:

1. The key factor of switching speed is R_nC, where R_n is the negative resistance.

2. The leakage inductance seems to have little effect.

A stability criterion of tunnel diode switching circuits was derived and some numerical calculation was done. The experiment showed close agreement with calculation.

(T. Kunihiro and H. Guckel)

PART III

MATHEMATICAL METHODS

1. The Effects of Round Off Errors on the Number of Iterations (Supported in part by the National Science Foundation under Grant G9503.)

In solving the equations (or the system of equations)

$$U = bu$$

by the iterative procedure

$$U_{n+1} = bU_n$$

on a machine, one obtains approximants $\bar{U}_n$ which satisfy

$$\bar{U}_{n+1} = b\bar{U}_n + \delta_n$$

where δ_n are the errors introduced by the fact that the arithmetic operations are performed inexactly.

If one assumes that the δ_n are independent random variables with the same mean and variance, one may show that the mean and variance of the U_{n+1} and $\bar{U}_{n+1} - \bar{U}_n$ behave differently as functions of n and b. In general, the latter quantities are "smoother" than the former. Since the usual stopping criterion for the above iteration process is based on the behavior of $|\bar{U}_{n+1} - \bar{U}_n|$ and since the quantity behaves "better" than the U_{n+1}, the quantities in which one is interested, the usual stopping procedure is likely to involve more iterations than are justified. That is, iterations may be wasted.

An analysis has been made of the statistical behavior of the $\bar{U}_{n+1}$ and $\bar{U}_{n+1} - \bar{U}_n$ on the assumption that the δ_n are independent random variables. Experiments were performed on Illiac which contradicted the results of the analysis. A subsequent investigation showed that for the simple case where U and b are vectors, the assumptions made concerning the δ_n were unjustified. It is planned to repeat the experiments for the case where the U_n are vectors and b is a matrix. Various methods for avoiding the wasteful iterations will be tested.

(R. T. Gregory and A. H. Taub)

2. Translation of "A Guide to Mathematical Tables" by Lebedev and Fedorova.

A translation of this book is being prepared. It is about 85 per cent completed. This book is similar in purpose to the well known book by Fletcher, Miller and Rosenhead, "An Index of Mathematical Tables", but it is more up-to-date and it is better organized. It should be pointed out that this book can be used fairly effectively by a person who has no knowledge of Russian.

(L. Fosdick)

3. Functional Integration (Supported in part by the Office of Naval Research under Contract Nonr-1834(27).)

A study of literature on the Feynman path integral (see "Space-Time Approach to Non-Relativistic Quantum Mechanics" Reviews of Modern Physics, Vol. 20, p. 267 (1948)) and related topics is being made. The object is to determine whether there is a chance that Monte Carlo techniques can be effectively applied to problems in this area.

(L. Fosdick)

PART IV

ILLIAC USE AND OPERATION

New Illiac Codes

During the month of July five new routines were added to the Illiac Library.

M31 - 297 Drum Routine for Linear Programming by the Simplex Method-Modified for Variable Resource b_i (SADOI or DOI). This routine is similar to M30-296 except that it has been extended by use of the Illiac drum in order to accommodate more variables. The restrictions placed upon the routine are:

j = number of activities (excluding slack vectors and P_0),

i = number of restraints;

where

$2(j + 1) + 4i \leq 667$,

$(j + 1)(i + 1) \leq 10{,}240$.

(Writeup prepared by R. W. Hacker)

M32 - 298 Williams Memory Routine for Linear Programming by the Simplex Method-Modified for Variable C_j. This routine is similar to routine M15-183, "Williams Memory Routine for Linear Programming by the Simplex Method", except that one of the C_j's may be varied by adding an increment ΔC_j.

The program proceeds by computing an optimal solution for the initial value, then it adds ΔC_k to C_k and computes a new optimal solution for $C_k' = C_k + \Delta C_k$. (The new solution may or may not be different from the previous one.) It continues in this way until it has computed a solution for C_k at its upper limit.

(Writeup prepared by R. W. Hacker)

M33 - 299 Drum Routine for Linear Programming by the Simplex Method-Modified for Variable C_j. This routine is similar to routine M32-298 except that it has been extended by use of the Illiac drum in order to accommodate larger problems. The restrictions placed upon the problem are:

$$(j + 1)(i + 1) \leq 10,240$$

$$4i + 2(j + 1) \leq 663$$

where:

j = number of activities

i = number of restraints

(Writeup prepared by R. W. Hacker)

S6 - 300 Exponential with Scaled Exponent. This routine replaces y, the contents of A before entry by e^{-x}. The quantity x is in the range $0 \leq x < 2^{37}$, and $y = x \cdot 2^{-n}, 0 \leq n < 63$.

(B. D. Elliott)

KSL 5.60 - 301 Matrix Normalization. This routine will normalize a matrix by rows or by columns. That is, it will convert each row or column of the matrix into a unit vector. The elements of the normalized matrix will be printed by rows, up to 12 decimal places as designated by the user.

(F. H. Shimamoto)

Illiac Usage

During the month of July specifications were presented for 24 new problems. This list does not indicate how the Illiac was used because large amounts of machine time may have been consumed by problems with numbers less than 1733. Numbers followed by T are for theses.

1733 Sociology. Subjective Age and Adjustment. This study is based on interviews with 257 individuals over 60 years of age and 257 close associates of these aged respondents. It is a follow-up of a previous study which pointed

up the vital importance of the variable of subjective age as a factor in the adjustment of the aged. In this study, a correlational analysis will assess the degree of relationship between adjustment and a number of variables relating to subjective age, some of which are based on the associate data. Indices of role changes are also interrelated with the above. A major focus of the analysis will have to do with the relative influence on adjustment of various factors related to subjective age as well as indices of two role changes.

The analysis will involve zero-order correlation, correlations which partial out several of the subjective age variables, separately and together, multiple correlations, and Fisher's Z scores. Separate correlational analyses will be performed on each of four age groups in addition to the analysis of the entire sample.

1734 Physics. Analysis of Pion Interactions. The analysis of high energy interactions of pions with nucleons is not straightforward, because there are usually several angular momentum and isotopic spin states involved in even the most elementary process, for example π^- p elastic scattering in the Bev energy region. Even at lower energies (0.1 Bev), where the scattering can be described in terms of five or six phase shifts, ambiguities occur in that there are usually several solutions arising from conventional phase shift fitting of the data. Preliminary analysis of scattering data in the range of energies from 0.5 to 1 Bev indicates that fourteen phase shifts would be needed to describe the elastic interaction. Thus, even if all possible sets of phase shifts could be found by conventional means, there would still remain the problem of deciding which set was physically correct.

It seems necessary, therefore, to try to extract from the data as much information as possible about processes which are known to be interfering, for example, there are indications that diffraction effects are quite important before attempting phase shift analyses of the various data which are available now.

Preliminary least squares fitting of the 915 Mev π^- p elastic scattering data has been carried out during the past year and a half using LESQUAF, a program which combines the ILLIAC Library subroutines K3, L7 and M14 and which provides as output the coefficients, chi, tabulation of the fitted function, and the inverse or error matrix. This program was developed

in Problem 1241. An alternative fit was done with Legendre polynomials on the IBM 650.

Future work on this problem will involve fitting of data at other energies using LESQUAF, numerical evaluation either by direct integration or Monte Carlo methods of Born approximation integrals with various interaction potentials, numerical evaluation of expressions for cross sections derived from various theoretical models of the interaction, and, perhaps eventually, phase shift analyses of the available data.

1735. Digital Computer Laboratory. Iteration Termination Study. A study will be made of termination techniques for stopping the iteration when solving a large system of linear algebraic equations by iterative methods of a certain class.

Because of roundoff errors, one should stop the iteration when $u_n - u_\infty$ is "pure noise". However, since u_∞ normally isn't known, one usually stops the iteration when $u_n - u_{n-1}$ is "pure noise".

It has been shown that the latter technique, under certain conditions, will always allow the calculation to go on longer than the former technique, the extra iterations being wasted because the solution is not being improved. This phenomenon is shown to be the result of "cancellation of noise" in $u_n - u_{n-1}$ by the subtraction involved.

Consequently, experiments will be performed whereby a random variable Δ_n will be added to $u_n - u_{n-1}$ so as to replace the cancelled noise. This random variable will be chosen in such a way that the variance in $u_n - u_{n-1} + \Delta_n$ will equal the variance in $u_n - u_\infty$.

Illiac code L8 - 302 will be used to carry out the proposed experiments. It will be modified as needed to vary the termination technique for the iteration.

1736. Coordinated Science Laboratory. Simulation of Atomic Configuration. The computer will generate $y = \alpha \cos wt$ and output the values of y and -y on the crt. This harmonic motion will be recorded on 35mm film to be later transferred to a 16mm movie.

1737T Geology. Hydrometer Analysis of Soil. In this investigation, the effect of weathering upon glacial deposits is being studied. With time, weathering decreases the grain size of the particles in a weathering profile. The grain size distribution of profiles of slightly different age is being determined to see if the older profiles show a significantly greater increase in the finer sized particles.

In this problem, 300 to 500 soil samples from 19 weathering profiles are being analyzed. The grain size distribution of the silt and clay portion of each sample is determined by hydrometer analysis which is described briefly below.

Each soil sample is mixed with water, thoroughly shaken in a sedimentation cylinder, and allowed to settle. The density of the suspension is determined periodically with a soil hydrometer. Certain simple formulas based on Stoke's Law convert the density information to the percentage of soil smaller than a certain diameter. The density of the suspension changes with time, since the larger particles settle faster than the smaller ones. A series of readings at various times gives the size distribution of the sample.

1738 Psychology. Changes in Brain Function with Thyroid Deficit. Patients having cancer of the thyroid are given total thyroidectomies as a theraputic measure. They are then given thyroid hormone pills to duplicate the function of the missing gland. A small group of the patients were given a battery of psychological tests, including markers for Thurstone's Primary Mental Abilities. They were also given an electro-encephalogram, which permitted determination of alpha rhythm frequency, response to photic driving, etc. Thyroid hormone replacement was withdrawn and the patients were given the same battery of tests after a period of one month.

A factor analysis of change scores on both electro-encephalogram and psychological test measures is planned in order to determine whether changes in electro-encephalogram induced by the thyroid deprivation are correlated with changes in the primary mental abilities. The patterns of changes produced in this experiment will be studied for evidence relating specific psychological abilities to specific neural mechanisms.

1739 Psychology. Prediction of Choice. Research on the prediction of choice has usually been conducted by asking subjects to state their relative preferences among a variety of objects. These ratings are then compared with actual choices in some market or cafeteria type situation. Choices made in this way are not typically independent of each other; however, the nature of the dependencies among choices and their effects on the accuracy of prediction are poorly understood.

In exploring this problem, 40 subjects were asked to rate 309 landscape features (mountain brook, suburban home, etc.). They were then given scale models of some of these features and were asked to construct any kind of landscape they wished. Comparisons of ratings with constructions suggested that prediction might be improved by grouping individuals into classes according to general preference types (preference for out of doors, for small communities, for large towns, etc.).

A factor analysis of persons (Q - technique) in which each correlation coefficient will represent the degree of similarity in choice between two persons is planned. Factors taken from this study will represent preference types. These preference types will then be used to attempt to improve prediction of actual choices in the free landscape construction.

1740 Digital Computer Laboratory. Display of Digitalized Bubble Chamber Photographs. Bubble chamber photographs have been digitalized by photoelectric scanning on the TX-2 computer and have been output on punched paper tape. This will be input to Illiac, processed, and output to the photographic oscilloscope.

1741 Mining and Metallurgical Engineering. Correction Factors for Absorption for Pole Figure Determination. The actual research problem is concerned with the study of orientation distributions in cold worked and annealed metals. This is done by means of determining a pole figure using x-ray diffraction techniques. In this method, the metal sample is mounted on a diffraction goniometer and intensities are recorded at different settings of the goniometer. Since the diffracting volumes and the path lengths are different, depending on the orientation of the specimen with respect to the incident x-ray beam, suitable correction factors have to be applied to take care of these changes.

1742 Institute of Labor and Industrial Relations. Local Union-Management Relations. Through field interviews data on 30 variables in a sample of 33 establishments has been gathered. From these data, two intercorrelation matrices--one for management respondents, the other for union respondents--have been prepared.

Two factor analyses by the principal axes method by orthogonal (Quartimax) rotation will be made. The objective is to identify factors which represent major descriptive aspects of union-management relationships.

A group of 37 establishments which were studied originally in 1955-56 has been re-surveyed. In the latter study, Illiac performed a factor analysis on 35 variables. The 1955 factor analysis and a parallel one for the re-survey data of 1959 based on a revised and refined set of 32 variables will be done. In these cases, the principal axes method, followed by orthogonal (Varimax) rotation will be used.

1743 Institute for Research on Exceptional Children. The Relationship between Current Marital Integration and an Estimate of Marital Integration Early in the Marriage and Parents' Dissatisfaction with Behavior of Children. The problem consists of an analysis of two conceptually distinct relationships. The relationship between three components of an index of current marital integration of husband and wife and a dependent variable consisting of an estimate of marital integration early in the marriage (marital prediction score) will be submitted to multiple correlation analysis.

The relationship between three components of an index of marital integration and dependent variables consisting of the father's dissatisfaction with child's instrumental behavior, the mother's dissatisfaction with instrumental behavior, the father's dissatisfaction with expressive behavior, and the mother's dissatisfaction with expressive behavior of the child will also be submitted to multiple correlation analysis.

The sample consists of 106 married couples. Illiac routine K-16 will be used to obtain multiple r's between the independent variable and the specified dependent variables.

1744 Coordinated Science Laboratory. Teaching Machine. The teaching machine problem is an example of a real time program. The object is to use

a machine to tutor students. The central control element in the teaching machine is Illiac.

The student communicates with the computer by means of a teletype keyboard, and the machine communicates with the student by means of a television picture display. The computer selects slides as well as writing and erasing diagrams or sentences on a storage tube. The selected slide, together with the information on the storage tube, is displayed.

Potentially, it appears that many types of subject matter can be taught to large numbers of students by means of such a device. However, as a first objective, the teaching of Illiac coding to a single student will be attempted.

1745 Coordinated Science Laboratory. Digital Computer Circuit Analysis. The problem is to determine equilibrium node voltages and branch currents in "computer type" circuits with nonlinear elements. This is to be accomplished using a previously developed program provided by the Digital Computer Laboratory.

1746 Agricultural Economics. Spatial Equilibrium Analysis of Feed-Grains Economy. This problem is to be used to form a spatial equilibrium model of the feed-grains economy of the United States, with special emphasis on the north-central region. The model is to be used to determine the total transportation bill of feed grains, the volume of feed grains transported, the origination and destination of transportation of feed grains and, more specifically, the approximate volume moved among states of the north-central region.

1747T Food Technology. The Relation between the Proteins in Cottage Cheese, Their Electrophoretic Properties and Quality of the Product. The electrophoretic properties of cottage cheese protein are to be studied. The first objective will be to establish an electrophoretic pattern of normal good quality cottage cheese and identify the protein components present. After the first objective has been achieved, then several variables will be

studied. The composition of skim milk as affected by breed of cow and by heat treatment; the concentration of acid in the protein environment; and the presence or absence of the enzyme rennin will be investigated.

A method for utilization of the digital computer in the analysis of electrophoresis patterns has recently been developed. It is felt that the accuracy and time gained by use of the digital computer in the analysis of electrophoretic patterns would be very beneficial.

1748 Sociology. Interpersonal Competence in Marriage. The Illiac will be used to perform a factor analysis of the responses of husbands and wives in 495 families to 104 questions in a marriage adjustment study. The items to be factor analyzed refer to competence in interpersonal relations as indicated in marriage. The married couples, in the sample, have now taken part in three phases of a longitudinal study beginning with their engagement.

In the factor analysis, Illiac routine KSL 2.01 K8 will be used to compute a correlation matrix. KSL 1.20 will be used to extract common factors. Following this, an orthogonal rotation of the factors will be accomplished with routine KSL 1.80 (Varimax).

1749 Physics. Scattering. This problem involves a least squares fit for a differential scattering cross section curve. The coefficients and their errors for various degrees of a polynomial will be obtained, 13 groups of (x_i, y_i, w_i) are to be fitted by straight line ($n = 2$), 3 groups of (x_i, y_i, w_i) are to be fitted by $n = 3$, $n = 4$, $n = 5$, respectively.

1750 Institute for Research on Exceptional Children. Parents' Dissatisfaction with Social Behavior of Children Ages 5 to 16. Factor analyses of the responses of fathers and mothers in 236 families to 50 items relating to social behavior of children of ages 5 to 16 inclusive will be made. Both parents provide responses on all items for 153 boys and 135 girls. In responding to each item, the parent indicates either satisfaction or dissatisfaction with his child's performance.

Execution of 8 separate factor analyses is proposed. The 236 families will be classified on the basis of the degree of marital integration exhibited by the parents, i.e., the sample will be split into high and low

marital integration families. Factor analyses will then be performed for the responses of high-marital-integration fathers for boys and for girls separately and for low-marital-integration fathers for boys and for girls separately. A similar set of 4 analyses will be performed for the mothers' responses.

Illiac routine KSL 2.40 will be used to compute matrices of phi coefficients. KSL 1.20 will then be used to extract centroid factors and will be followed by KSL 1.90 to rotate the factor matrix for oblique simple structure.

1751 Coordinated Science Laboratory. Man-Machine Cooperation. Generally, the project is concerned with the cooperation between man and machine in situations where decision-making may be carried out by either. At present, a simple real-time problem with a large number of known solutions is displayed on a charactron-tube so that man can solve the problem either alone or in cooperation with the machine. Of interest here is the extent of man-machine cooperation as a function of man's estimate of the computer's ability to reach the best solution.

In addition to obtaining the list of possible solutions of a given problem, the computer is used for recording and scoring each play.

1752 Physics. Stellar Evolution. By solving a set of differential equations describing conditions in the stellar interior, it is possible to construct a sequence of initial (homogeneous composition) stellar models lying on the main sequence in the mass range 1 to 2 1/2 times the sun's mass. In this mass range, the dominant mode of energy generation changes from the C-N (carbon-nitrogen) to the P-P (proton-proton) process, and energy transport in the stellar core changes from convective to radiative transfer.

By estimating the change in composition due to hydrogen burning over a finite time interval, it will be possible to construct early evolutionary (inhomogeneous composition) models derived smoothly from each initial model. The equations to be solved are:

$$(1)\quad \text{Smaller of} \begin{cases} \left(\frac{dt}{dx}\right)_{\text{radiative}} = -A\,\frac{K\rho f}{x^2 t^3} & \text{(radiative energy transport)} \\ \left(\frac{dt}{dx}\right)_{\text{adiabatic}} = \frac{2}{5}\,\frac{t}{p}\,\frac{dp}{dx} & \text{(convective energy transport)} \end{cases}$$

(2) $\frac{dp}{dx} = - Bq \rho / x^2$ (mechanical equilibrium)

(3) $\frac{dp}{dx} = C \rho x^2$ (conservation of mass)

(4) $\frac{df}{dx} = D \rho x^2$ (conservation of energy),

where x = radial distance from the center of the star

ρ = mass density

p = gas pressure

t = temperature

q = mass contained in a sphere of radius x

f = radial energy flux

where A, B, C and D are constants, and the subsidiary conditions are:

$$p = H \left(\frac{3+5x_H}{4}\right) \rho t \quad \text{(equation of state)},$$

where H = constant

x_H = relative concentration of hydrogen

$$\epsilon = \epsilon_{pp} + \epsilon_{CN} = \rho(\bar{\epsilon}_1 x_H^2 t^4 + \bar{\epsilon}_2 x_H z t^{18} e^{1.11 \quad 1/3} t^{-1})$$

where $\bar{\epsilon}_1$, $\bar{\epsilon}_2$ are constants, z = relative concentration of elements heavier than helium;

$$K = 0.19 (1 + x_H) + K' 10^G \left(\rho \frac{1+x_H}{2}\right)^{\bar{\alpha}} t^{-F} \quad \text{(opacity)},$$

with K' = constant, and

$$\left.\begin{aligned} \bar{\alpha} &= \bar{\alpha}(t) \\ F &= F(x_H, z, t) \\ G &= G(x_H, z, t) \end{aligned}\right\} \quad \text{are complicated functions.}$$

The boundary conditions are:

(1) at $x = 0$, $q = f = \frac{dt}{dx} = \frac{dp}{dx} = \frac{dq}{dx} = \frac{df}{dx} = 0$

(2) $\rho = p = t = 0$ at some finite value of x.

To solve for homogeneous models, one specifies starting values of x_H, z, $\bar{\epsilon}_1$, $\bar{\epsilon}_2$, $\rho_c = \rho(x = 0)$, $t_c = t(x = 0)$. The integration for small values of x can be done using a power series expansion for small x. The integration is continued until t drops below a certain specified value, where an analytic solution, which may or may not satisfy the surface boundary condition, can be added on. For each value of ρ_c, the results of trial solutions carried out for several values of t_c permit the determination of that t_c which will give an acceptable solution.

For inhomogeneous models, a finite time interval ΔT is chosen. For each acceptable homogeneous model, of total mass q_0, the change in hydrogen concentration x_H is estimated as a function of q, $0 \leq q \leq q_0$, over the time interval ΔT:

$$\Delta x_H(q) = \left.\frac{dx_H(q)}{dt}\right|_{t=0} \Delta T.$$

Values of ρ_c and t_c are then found, which give an acceptable solution of mass q_0.

1753T Northwestern University, Speech Department. A Factor Analytic Study of the Intelligence of Deaf Versus Hearing Children. The purpose of this study is to compare the factor patterns emerging from a series of standardized intelligence tests (mainly non-verbal) applied to 120 deaf children versus those emerging from the same tests applied to 120 hearing children (aged 8-0 to 12-0 years).

This involves:

1. (a) Correlating the 51 variables re the deaf children.
   (b) Correlating the 48 variables re the hearing children.
2. Initial factor extractions re the deaf versus hearing samples separately.
3. Rotation of each to simple structure.
4. Extraction of the second order factors re each sample and their rotation.

1754 Institute for Research on Exceptional Children. Attitude Analysis. An instrument based on the concept of semantic differential has been devised for the measurement of attitudes in the area of the exceptional child.

This instrument was used to measure the attitudes of graduate students.

Two sets of attitudes were checked: those toward various types of exceptionalities and those toward the concepts of parental attitudinal sets.

It is the purpose of this study to ascertain the feasibility and efficacy of the instrument via a factor analysis of each of the above sets.

1755 Physics. Spin Relaxation. If the populations of the magnetic sub-levels of an atomic system are disturbed from their thermal equilibrium values, they gradually "relax" back to equilibrium. The exact way in which this relaxation occurs as a function of m, the magnetic quantum number, is accessible to experiment, and provides clues as to the interactions of the system with its surroundings. With a given system, and a given hypothesis about its interactions, the time-variation of the magnetic sub-level populations, n, is a simple matrix equation,

$$\dot{n} = mn$$

where m is time-independent; it is a square matrix with 2(2I + 1) rows and columns, where I is the spin of the system. In the case of current interest, it has elements only along the principal diagonal and one step removed ($\delta_{m'm\pm1}$).

It is desired to use Illiac to solve this matrix equation for a number of cases, with two objects in mind:

1. To check with experiment on the hypothesis of the interactions.

2. To examine the practicability of an alternative approach to the problem, in which the "moments" of the populations are taken as new variables. The ℓth moment is $\sum_m n_m f_m^{\ell}$, where f_m^{ℓ} are an orthogonal set of functions). It is suspected that with the moment equations, it may be possible to truncate the matrix, and restrict attention to only the first few moments. For the cases where I is very large, this is computationally advantageous, as well as providing physical insight.

1756 Economics. Specification Error in Recursive Systems Due to Aggregation of Data Over Time and Data Collection Methods. The purpose of this problem is to isolate and measure the effects of specification errors--relating to aggregation and data omission--on the properties of estimates in systems of linear equations. The approach uses a generating model to generate samples of data by Monte Carlo methods and specification errors are introduced by using estimating models which differ in known ways from the generating model. Estimates are made for each sample by both maximum likelihood and "k" class estimators.

The generating model is

$$y' = \pi_y Y + {}_2 Z + V'$$

where y' is a G x 1 column vector of endogenous variables, Y is a G x ℓ matrix of lagged y's with maximum lag s, Z is a G x m matrix of exogenous variables and V is a G x 1 vector of random shocks. π_y and π_2 are based on parameters of the original structure. The Illiac is used to generate Z and V' from a multivariate normal distribution with given means, variances and covariances. The sample data are aggregated over time so that t aggregate observations are punched out on each variable for each sample. This gives "annual" data.

The estimating models are designed to contain simplifications in the generating model which permit the isolation of the effects of the specification errors. Sensitivity analyses can then be run on the estimates to determine how the different estimating methods react to each specification error.

Estimates are made by KSL - 4.50 and "k" class estimation programs, of which ordinary least squares as obtained by K - 16 is a special case. All master programs for this problem are now in existence.

Problems of this sort have not yielded to analytic solutions for finite samples so that the properties of the estimates are unknown. This makes these results useful to forecasters using econometric models.

Table I shows the distribution of Illiac machine time for the month f July.

TABLE I

	Hrs:Min	
Scheduled Maintenance	55:03	
Unscheduled Maintenance	37:11	
Drum Engineering	5:02	
Leapfrog	8:16	
Wasted	:05	
Library Development	1:06	
Demonstrations	:22	
Classes	14:48	
		121:53

Use by Departments

Aeronautical Engineering	:25
Agricultural Economics	37:52
Agronomy (36-15-65-400-38)	:48
Agronomy (00-15-65-330-38)	:25
Agronomy	8:21
Animal Science	2:09
Bureau of Educational Research (PH-M1839)	:41
Bureau of Educational Research	10:30
Chemistry (NSFG 7336)	6:06
Chemistry (NSFG 5907)	1:42
Chemistry (NONR 1834 (13))	:40
Chemistry	69:47
Coordinated Science Lab. (DA-36-039-SC56695)	82:30
Digital Computer Laboratory (AEC AT (11-1)-415)	22:47
Digital Computer Laboratory (NSF GRANT 9503)	18:20
Digital Computer Laboratory	11:11
Economics (NSFG 7056)	5:56
Economics	1:10
Education	6:02
Electrical Engineering (NASA-NSG 24-59)	1:54
Electrical Engineering (AF 33 (616) 6079)	1:45
Electrical Engineering (NSFG 7421)	2:15
Electrical Engineering (NONR 1834(22))	2:01
Electrical Engineering (NSF 7040)	3:31
Electrical Engineering (DA-36-039-SC84525)	1:17
Electrical Engineering	4:14
Food Technology (50-343)	:39
Geology	2:38
Institute for Research on Exceptional Children	5:07
Inst. for Res. on Excp. Children (U.S.P.H. NIH M-3207)	3:43
Institute for Research on Exceptional Children	:21
Institute of Communications Research	1:49
Institute of Labor and Industrial Relations	:14

(continued)

Liberal Arts and Sciences	2:04		
Mathematics	1:52		
Mechanical Engineering	13:11		
Medicine	1:16		
Mining and Metallurgical Engineering (TRUS AF6770)	:12		
Physics (NONR 1834(05))	15:21		
Physics (AF 49(638)-529)	:19		
Physics	2:09		
Psychology (NONR 1834(11))	5:07		
Psychology (AF 49(638) 371)	7:25		
Psychology (AF 41-657-279)	2:44		
Psychology (MD 2060)	:51		
Psychology	46:41		
Sociology	2:31		
State Geological Survey	:27		
State Water Survey (DA-36-039-SC75055)	5:21		
State Water Survey	2:33		
Structural Research (NSF-G6572)	3:11		
Structural Research (NONR 1834(03))	2:36		
Structural Research (AASHO ROAD TEST)	1:33		
Structural Research (AF 29(601)-2591)	2:37		
Structural Research	42:22		
Student Counseling Service	:45		
Theo. and Appl. Mech. (AF(616)6643)	1:11		
Theo. and Appl. Mech. (DA-11-070-508 ORD 593)	12:08		
Zoology	1:03		
Loyola University	:25		
Northwestern University	1:49		
United States Navy	:15		
		498:49	
			620.42

Error Frequency and Analysis

The machine is normally used for "engineering" and maintenance between 7:00 a.m. and 10:30 a.m. Since the periods between 7:00 a.m. and 10:30 a.m. together with certain irregular periods, such as Saturdays and Sundays, are devoted to a heterogeneous group of engineering, maintenance and laboratory functions, it is more instructive, from an error standpoint, to look at the periods between 10:30 a.m. and 7:00 a.m. of the next day in order to make an observation of the error frequency in the machine. This is the actual period when the machine is designated for use, although certain engineering procedures frequently require the scheduling of extra maintenance time. With this in mind, a summary table has been prepared using the period between 10:30 a.m. and 7:00 a.m. of the next day. This table lists the running time when the machine was

operating, the amount of time devoted to routine engineering, the amount of time devoted to repairs because of breakdowns, and a number of failures while the machine was listed as running. Each failure was considered to have terminated a running period and was followed by a repair period in preparing this table. Since the leapfrog code is our most significant machine test, the length of time which it has been used on the machine is listed separately, together with the number of errors associated with that particular code. This information for the month is presented in Table II.

It is important to notice that, except during scheduled engineering periods, any interruption of machine time that was not planned is considered a failure in this table. In rare cases, where the failure is not known until a later time, it is possible that no repair period is associated with the failure. This over-all system has been adopted because it makes it possible for a machine user to estimate directly the probability that the machine will be "running" any instant of time and the probability of a failure during any given interval of running time.

TABLE III

Reader	3
Punch	5
Memory	4
Control	4
Scope	2
Drum	5
Power	3
Unknown	4
Total	30

TABLE II

DATE	RUNNING OK TIME	REPAIR TIME	SCHEDULED ENGINEERING	INTERRUPTIONS OR FAILURES STOPPING OK TIME	TYPES OF INTERRUPTIONS OR FAILURES CAUSING REPAIR TIME	WASTED	LEAPFROG	FAILURES STOPPING LEAPFROG
7/1/60	22:35	:00	1:25	0		:00	:20	0
7/5/60	19:27	1:56	2:37	2	(1) Scope Error	:00	:30	0
					(2) Drum Error			
7/6/60	20:10	1:20	2:30	2	(1) Drum Error	:00	:20	0
					(2) Reader "B" Error			
7/7/60	14:56	5:54	3:10	2	(1) Control Error, Illiac	:00	:20	0
					(2) Illiac, Raised D. C. Voltage			
7/8/60	21:21	:00	2:39	0		:00	:20	0
7/9/60	23:54	:06	:00	1	(1) Punch #4 Error	:00	:00	0
7/10/60	24:00	:00	:00	0		:00	:20	0
7/11/60	21:52	:20	1:48	1	(1) Error due to Current Drain when large Air Conditioner started	:00	:12	0
7/12/60	19:26	1:09	3:25	1	(1) Illiac Memory Error 2^{-3}	:00	:33	0
7/13/60	21:03	:09	2:48	1	(1) Punch #1	:00	:20	0
7/14/60	21:16	:00	2:44	0		:00	:00	0
7/15/60	21:44	:01	2:15	1	(1) Punch #4 Jammed	:00	:00	0
7/16/60	24:00	:00	:00	0		:00	:00	0
7/18/60	21:02	:40	2:18	2	(1) Hangs Up on "LO" Orders, Trouble not Discovered	:00	:00	0
					(2) Camera Error			
7/19/60	12:20	8:25	3:15	3	(1) Reader "B" Light Out	:00	:00	0
					(2) Drum Failure			
					(3) Drum Failure			
7/20/60	21:05	:05	2:50	1	(1) Reader "K" Motor Out	:00	:22	0

DATE	RUNNING OK TIME	REPAIR TIME	SCHEDULED ENGINEERING	INTERRUPTIONS OR FAILURES STOPPING OK TIME	TYPES OF INTERRUPTIONS OR FAILURES CAUSING REPAIR TIME	WASTED	LEAPFROG	FAILURES STOPPING LEAPFROG
7/21/60	20:51	:51	2:18	2	(1) Memory Position 2^{-31}	:00	:20	0
					(2) Unknown			
7/22/60	19:12	2:19	2:29	3	(1) Filaments on Illiac too Low	:00	:20	0
					(2) Punch #4			
					(3) White Switch, Control Error			
7/25/60	21:46	:01	2:13	1	(1) Punch #4 Error	:00	:20	0
7/26/60	21:32	:00	2:28	0		:00	:20	0
7/27/60	12:55	8:34	2:31	2	(1) Memory Positions 2^{-22} and 2^{-36}	:00	:33	1
					(2) Memory Positions 2^{-9}			
7/28/60	22:04	:00	1:56	0		:00	:20	0
7/29/60	20:50	:57	2:13	1	(1) Drum Failure	:00	:41	0
7/30/60	21:45	2:15	:00	2	(1) Control Error	:00	:00	0
					(2) R_3-Set Button Bad (Control)			
7/31/60	21:17	2:43	:00	2	(1) Unknown	:00	:00	0
					(2) Unknown			
TOTALS	512:23	37:45	49:52	30		:00	6:31	1

PART V

IBM 650 USE AND OPERATION

IBM 650 Usage

During the month of July, specifications were presented for 12 new problems. This list does not indicate how the IBM 650 was used because large amounts of machine time may have been consumed by problems with numbers less than 133'. Numbers followed by T are for theses.

133' Electrical Engineering. Faraday Rotation Analysis. This program will be involved in investigating the ionosphere, using data obtained from recordings of satellite passages and the Faraday Rotation Rate of the signals. In this analysis, three equations in three unknowns will be solved. High accuracy is needed in the solution. Mathematically, the solution is to find the determinate elements, then solve the equations using these in a straightforward manner. The unknowns are the integrated electron density of satellite height, the electron density at this height and the slope of the profile at this height.

134' Executive Development Center. General Management Simulation. The game is a mathematical model of a business economy which has been designed within which three companies compete for their share of the market. Business decisions are made for 10 quarters. Machine time required is about 10 minutes per quarterly set of decisions.

135'T Chemistry. Quadrapole Coupling Constant. This research problem is concerned with the quantum mechanical calculation of the nuclear quadrapole coupling energy of several molecules, such as LiH, LiD, DF, BH and NH. A comparison of this energy with experimental results will yield information about the electric field gradient of certain atoms in the molecules that will be studied. The information about the field gradient can be used to investigate the chemical bonding systems in the molecules studied.

The major mathematical method involves a first order perturbation technique. The integrals will be evaluated by techniques that involve an expansion in elliptical coordinates.

136' State Water Survey. Drop Size Distribution. At present, rain drop size measurements are automatically punched into cards as the data film tape and the tape submitted to Illiac on Problem No. 1213. To determine the most satisfactory means for handling this data, a program to handle the cards directly on the 650 has been written. The basic data cards contain the horizontal and vertical measurements of the individual drops. These measurements are averaged and the frequency distribution of the drops are determined by the machine. A matrix multiplication of (1 x 76) by a (76 x 5) matrix is then performed to obtain the rainfall rate, radar reflectivity, radar attenuation cross section, the liquid water content, and the collection efficiency of the sample.

137' Psychology. Simplex Analysis. An intercorrelation of a set of variables, with variances and means, will be used.

Two experiments in skill learning have been conducted; one in shorthand and one in learning a new language. It is hypothesised that in the learning process, we can discern stages forming a simplex; that is, the intercorrelations of the stages taper off the matrix diagonal (or the correlations decrease with the distance between the stages). In addition, there is a series of tests serving as predictors, which might give a differential predictor for the different stages.

As a side product of the program, speed and power tests have been obtained. The correlation between these tests as well as their validities will be of value in planning future research.

138' Bureau of Educational Research. Intercorrelations among Teacher-Pupil Variables. Intercorrelations will be obtained between various measures of how pupils describe their actual and ideal teachers and of how teachers describe themselves and predict their pupils' descriptions. Teachers are divided into a Control group and an Experimental group. The latter has been given information on how their pupils described them and the ideal teacher, while the Control group has not. A total of 36 intercorrelations will be obtained for each of five groups of teachers (Control, three Experimental subgroups, and Total Experimental groups) for each of 12 items.

139'T Mining and Metallurgical Engineering. Correction Factors for Absorption for Pole Figure Determination. The actual research problem is concerned with the study of orientation distributions in cold worked and annealed metals. This is done by determining a pole figure using x-ray diffraction techniques. In this method, a metal sample is mounted on a diffraction goniometer and intensities are recorded at different settings of the goniometer. Since the diffracting volumes and the path lengths are different, depending on the orientation of the specimen, with respect to the incident x-ray beam, suitable correction factors have to be applied to take care of these changes.

140'T Agricultural Economics. Spatial Equilibrium Analyses of Livestock-Feed Economy. This problem is to obtain the optimal shipping patterns of farm produces from the surplus regions to deficit regions in United States, in such a way that total transportation costs be minimized.

The nature of the problem is exactly the 650 program library routine described in 10.1.003. Its solutions can be obtained directly with the use of this routine.

141'T Industrial Education. An Experimental Study of the Relative Effectiveness of the Direct Detailed and the Directed Discovery Methods of Teaching Letterpress Imposition. This study is being made to determine which of two teaching methods is most effective in helping 106 high school vocational-industrial students to learn a basic lesson in letterpress imposition. Three groups have been divided into three mental ability levels, and are to be tested (for matching purposes) on each of eight other factors. Two of these groups received a 50 minute lesson in the learning task, using different methods; the third group acted as a control. All three groups took identical tests immediately after the treatment; they also took identical tests one week and six weeks after treatment to measure retention. In addition, all groups took identical tests at the one and six week periods to measure transfer of learning.

The statistical technique employed is a combination of 3 x 3 and 2 x 3 (eliminating the control group) treatment by levels and analysis of variance design.

The composition required involves F tests to determine the equivalence of the three groups in the three levels and of the two groups in the three levels, on each of the nine attributes of the subjects. The same approach is needed to determine significant (.05) differences in means on each of the five criterion tests and on the four sets of difference scores derived from test scores.

In addition, intercorrelation matrices will be needed to determine split half reliability, test-retest reliability and the relationship between all personal attributes and test results on each of the three treatment groups, a combination of two of the treatment groups, and on each of the three mental ability levels.

142' Agricultural Economics. Analysis of the Demand for Selected Farm Products. This problem is part of a continuing appraisal of factors affecting the demand for farm products. It will use the standard regression routine, or modifications of that routine, and will be in the form of a sequence of linear or polynomial regressions among economic variables.

143' Physics. Kinematics of Four Particles. This is a general program which computes the kinematics of a reaction of an incoming particle of mass M_1 with a particle of mass M_2 at rest in the laboratory. Two outgoing particles, of mass M_3 and M_4 are present in the final state.

For specified ranges of initial kinetic energy and center-of-mass angles of particle 3, tables will be computed containing:

p^*, the barycentric momentum of either of the outgoing particles,

E^*, the total barycentric energy,

$T_{1\ th}$, the threshold kinetic energy of the incident particle for the reaction,

T_3^*, T_4^*, the barycentric kinetic energy of the outgoing particles,

T_3, T_4, the laboratory kinetic energy of the outgoing particles,

θ_3^*, θ_4^*, the barycentric angles of the outgoing particles,

θ_3, θ_4, the laboratory angles of the outgoing particles,

$\frac{\partial\sigma}{\partial\Omega^*} \Big/ \frac{\partial\sigma}{\partial\Omega}$ the ratios of the solid angle in the barycentric to the solid angle in the lab system for particles 3 and 4.

144' Economics. Distributed Lags of Economic Variables. Least squares estimates of the coefficient of several distributed lags of the Federal Reserve Index of Industrial Production and a simulated economic series generated under Illiac Problem #1447 are to be obtained. It is hoped that these estimates will indicate similarities between the actual and the simulated series and that a variable constructed from these estimates will improve the estimates obtained in certain economic models.

145' Agricultural Economics. Factors Affecting Butter Consumption. Estimates of the effect that the price support program for milk and butterfat has had upon producer prices have been made. In order to estimate the effect that these price changes have had upon consumption of dairy products, it is necessary to derive price elasticities of demand for the products. The objective of this correlation is to derive price and cross elasticities for butter.

146' Mining and Metallurgical Engineering. Curved Path Study of a Sonic Beam. Numerous physical parameters of rocks can be determined from a study of acoustic energy transmission through a porous medium. In a well-bore, special conditions are imposed which produce a variable acoustic impedance away from the well-bore. Certain integrals have been developed, which relate to travel time for acoustic energy along a continuously refracting path (curved path), the depth in which the beam penetrates the formation, etc. These are not standard integrals, therefore it is proposed to evaluate them numerically. From these evaluations, the time T, X, (vertical distance), and S (length of the path), can be related to such physical parameters as porosity, permeability fluid flow and pressure distribution.

Table I' shows the distribution of the IBM 650 machine time for the month of July.

TABLE 1'

		Hrs:Min		
Regular Maintenance		12:50		
Unscheduled Maintenance		6:23		
Air Conditioning		3:15		
Library Development - DCL		3:38		
Library Development - Agronomy/SSU		:10		
Log Summation		:47		
Classes		6:23		
Math 295	6:23			
Demonstrations		1:06		
Wasted		17:20		
			51:52	
Use by Departments				
Agricultural Economics		3:53		
Chemistry		21:28		
Digital Computer Laboratory		:56		
Economics		:06		
Electrical Engineering		:39		
Executive Development Center		2:40		
Graduate College		5:58		
Mining and Metallurgical Engineering		2:03		
Physics Research Laboratory		:11		
Psychology		2:05		
Statistical Service Unit		88:55		
Bureau of Educational Research	10:26			
Bur. of Institutional Research	:19			
Bursar's Office	6:45			
Business Office	9:39			
DHIA	26:29			
Education	2:36			
Horticulture	3:29			
Industrial Education	2:42			
Mining and Met. Engineering	14:08			
Psychology	4:29			
Student Counseling Service	7:53			
State Water Survey		2:48		
Structural Research		2:59		
Theoretical and Applied Mechanics		:28		
			135:09	
				187:01

Error Frequency and Analysis

The IBM 650 is normally on from 8 a.m. to 5 p.m. The machine is used for preventive maintenance from 8 a.m. to 12 noon on Mondays.

Table II' gives the daily breakdown of machine time with respect to wastage and unscheduled maintenance.

Table III' presents a summary of errors for July.

TABLE III'

533		2
Bent connectors	1	
Punch jam	1	
Storage unit circuits		19
Tape, tape control, or tape unit		44
Read errors	4	
Would not unload	1	
Roller blocking movement of tape	1	
Refuses to do 06 orders	38	
407		2
Prints incorrectly	1	
Off line keeps cycling	1	
653		1
Fuse blew	1	
Air conditioning		5
Refuses to do legal orders		4
Blank or multiple bits		4
	Total	81

DATE	RUNNING OK TIME	SCHEDULED ENGINEERING	REPAIR TIME	WASTED	FAILURES STOPPING OK TIME	AIR CONDI-TIONING	TYPES OF FAILURES CAUSING REPAIR TIME
7/1/60	6:46		:37	1:40	1		(1) Found bent connector in 533.
7/5/60	3:25	1:50		3:45	0		
7/6/60	6:51			2:11	1		(1) Refused to do a 30 order.
7/7/60	7:48			1:12	1		(1) Read multiple bits from tape consistently.
7/8/60	8:26		:23	:18	38		(1) 407 off-line printed incorrectly. (2)-(24) Hung up on 068013. (25)-(38) Hung up on 068012.
7/11/60	5:30	3:38		:07	1		(1) Air conditioning out due to line break.
7/12/60	8:53		:19	:06	3		(1) Fuse blew in 653. (2)-(3) Air conditioning went out twice.
7/13/60	7:58		:37	:29	2		(1)-(2) Blank bits and multiple bits in distributor and upper accumulator.
7/14/60	3:45		1:56	:04	20	3:15	(1) Air conditioning out. (2)-(19) Storage unit lights.
7/15/60	8:58			:05	1		(1) Tape unit 3 would not unload.
7/16/60	4:32		:20	:11	2		(1) Tape unit 1 had roller blocking movement. (2) A 20 order refused.
7/18/60	4:58	3:37		:25	0		
7/19/60	8:36			:32	0		
7/20/60	8:56			:12	1		(1) Refused to do a 10 0831 order.
7/21/60	8:40			:27	2		(1) 407 off line keeps cycling when not printing. (2) Tape read error.
7/22/60	8:21		:24	:17	0		Found shorted relay in 407.
7/25/60	4:05	3:45		1:10	2		(1) Air conditioning cut out. (2) Horizontal tape error.

DATE	RUNNING OK TIME	SCHEDULED ENGINEERING	REPAIR TIME	WASTED	FAILURES STOPPING OK TIME	AIR CONDI-TIONING	TYPES OF FAILURES CAUSING REPAIR TIME
7/26/60	7:58		:35	:27	3		(1) Refused to do 06 8011. (2) 533 punch jam. (3) Missing quinary bit in distributor - pos 2.
7/27/60	8:16			:55	0		
7/28/60	8:30			:45	2		(1) Hung up on 03 1046 1027. (2) Horizontal tape error on unit 2.
7/29/60	6:01		1:12	2:02	1		(1) Refused to do shift orders
TOTALS	147:13	12:50	6:23	17:20	81	3:15	

PART VI

GENERAL LABORATORY INFORMATION

Seminars

"A Critical Study of ALGOL", by Dr. Hermann Bottenbruch, Oak Ridge National Laboratory, Oak Ridge, Tennessee, (series of lectures during the period July 2 - July 17, 1960).

Personnel

The number of people associated with the laboratory in various capacities is given in the following table:

	Full-time	Part-Time	Full-time Equivalent
Faculty	8	-	8.00
Visiting Faculty	2	-	2.00
Research Associates	1	-	1.00
Graduate Res. and Teaching Assts.	18	6	21.75
Graduate Fellows	0	-	0.00
Administrative and Clerical	5	-	5.00
Other Nonacademic Personnel	30	4	32.66
Totals	64	10	70.41

The Laboratory Advisory Committee consists of Professors H. C. Brearley, D. Fosdick, D. B. Gillies, B. H. McCormick, G. A. Metze, D. E. Muller, T. A. Orrell, W. J. Poppelbaum, J. E. Robertson and J. N. Snyder.

UNIVERSITY OF ILLINOIS

GRADUATE COLLEGE

DIGITAL COMPUTER LABORATORY

TECHNICAL PROGRESS REPORT

PART I - HIGH-SPEED COMPUTER PROGRAM

PART II - CIRCUIT RESEARCH PROGRAM

PART III - MATHEMATICAL METHODS

PART IV - ILLIAC USE AND OPERATION

PART V - IBM 650 USE AND OPERATION

PART VI - GENERAL LABORATORY INFORMATION

August, 1960

PART I

HIGH-SPEED COMPUTER PROGRAM

This work is supported in part by Contract No. AT(11-1)415 of the Atomic Energy Commission and in part by the University of Illinois. Contract No. AT(11-1)415 is supported jointly by the Atomic Energy Commission and the Office of Naval Research.

1. Circuits

During the month, a series of informal lectures on circuit design procedures was concluded. New material presented included a synthesis procedure for resistance bleeders for direct-coupled non-saturating circuits and an analysis yielding fanout limitations for emitter followers, AND-OR complexes, and matrix circuits as a function of minimum transistor α, resistor and voltage tolerances, and overcurrent requirements. Notes prepared by those attending have been distributed in the form of file numbers, as follows:

File No. 324	"Analysis of a Switching Amplifier" by Bruce E. Briley
File No. 327	"Design of Emitter Followers" by M. D. Freedman
File No. 328	"Bleeder Design" by L. J. Peek
File No. 329	"Driver Design" by C. N. Liu
File No. 333	"Collector Logic as Applied to F-Element Design" by J. O. Penhollow
File No. 334	"Limitations on the Cascading of Non-Restoring Circuits" by R. E. Swartwout
File No. 336	"Matrix Logic Circuits" by Richard R. Shively
File No. 343	"AND's, OR's, and AND-OR Complexes" by R. L. Cummins

2. Separate Carry Storage Adder

The matrix adder installed in the shifting register test unit in May was found to be considerably slower than anticipated. Subsequently,

the analysis of fanout limitations of matrix circuits (described in the preceding section) indicated that sufficient overcurrent for fast operation could not be provided by matrix circuits, giving theoretical confirmation to the experimental results.

An adder design, employing AND-OR complexes, each tailored to the particular application, was completed during the month.

3. Arithmetic Control

As a result of a design study concluded in August, a first approximation to the solution of some of the control design problems and detailed control sequences for the arithmetic instructions to be included in the new computer are given in File No. 337, " Arithmetic Control Sequences for the New Computer", Part I by D. B. Gillies and Part II by J. O. Penhollow.

4. Control

New methods and proposals made during August for circuit realizations for the control are given in File No. 338, "Present Status of Circuits for Control" by J. E. Robertson.

5. Auxiliary Storage

A report on tape utilization and over-all data rates on the Ampex FR300 Magnetic Tape Unit was written (File 330). The relations between packing density, block size, start-stop times and distances, inter-record gap length and tape speed were discussed.

(R. L. Cummins)

Several magnetic tape codes of the Hamming type have been developed. They are described in File 335, "Single-Error-Correcting, Double-Error-Detecting Codes for Magnetic Tape". These codes are also double-error-correcting for the clock bits, i.e. clocking can still occur in the presence of double dropouts.

(C. W. Gear, C. N. Liu)

Automatic cycling of the FR300 unit for unattended dropout testing was begun. The cycling was over 1200 feet of tape terminated at each end by a conductive leader. Dropouts were measured only on the forward pass.

During the cycling, it was found that the lower tape packing arm was damaging the leader, and shortening its life by about 50%. Since the machine can run satisfactorily without the arms when only partially-full reels are used, the arms were removed, and dropout tests continued.

(M. D. Freedman, C. N. Liu)

PART II

CIRCUIT RESEARCH PROGRAM

(Supported in part by the Office of Naval Research under Contract Nonr-1834(15).)

1. Summary of the August Work

The mechanical layout of flow-gating was finalized. A detailed report giving the complete design background of the system is in preparation. Reliability tests on the 14-bit flow-gating test unit showed very satisfactory results. The development of transformer coupled tunnel-diode circuits was aided by using systematically "negative resistance modulation" and "bias-shifting". Sections 3.1 and 3.2 below give further details.

2. Flow-Flop Read-In Driver

The low power circuit chosen as the final model of the flow-flop read-in driver (see the July Monthly Progress Report) was tested together with a quarter-word register and a read-out driver. A serious problem was found by this test: emitter follower oscillation occurred, caused by long wires connecting the driver chassis and the main register chassis. There are three remedies for this trouble:

1. The use of the high power driver circuit shown in last month's report (whose output is drawn from collectors),
2. The insertion of damping networks at every base point,
3. The modification of the assembly in such a way that the connecting wires are eliminated.

Fortunately, after studying the final machine assembly with the systems group, it was found that solution (3) was applicable. All driver circuits were transferred on to the main register chassis and a careful study of wiring was carried out. The test after this modification proved that no oscillation troubles occurred.

(T. Kunihiro and H. Guckel)

3. Tunnel-Diode Circuitry

The investigation of transformer coupled tunnel diode circuits was completed. The main result of this investigation is that by interpreting asynchronism in a larger way, i. e., by calling "asynchronous" an information transfer in which the precise instants of signal changes are arbitrary but in which certain maximum rise-times must be adhered to (rather than also allowing arbitrary rise-times), it is possible to design rather simple and reliable circuits making use of twins in which the bias voltages on both ends are modulated in phase ("bias shifting") or in phase opposition ("negative resistance modulation").

3.1. Negative Resistance Modulation

Figure 1 shows the basic circuit used for negative resistance modulation as well as the effect upon the slope of the negative portion of the VI characteristic of both a positive and a negative increment of E_0. This increment

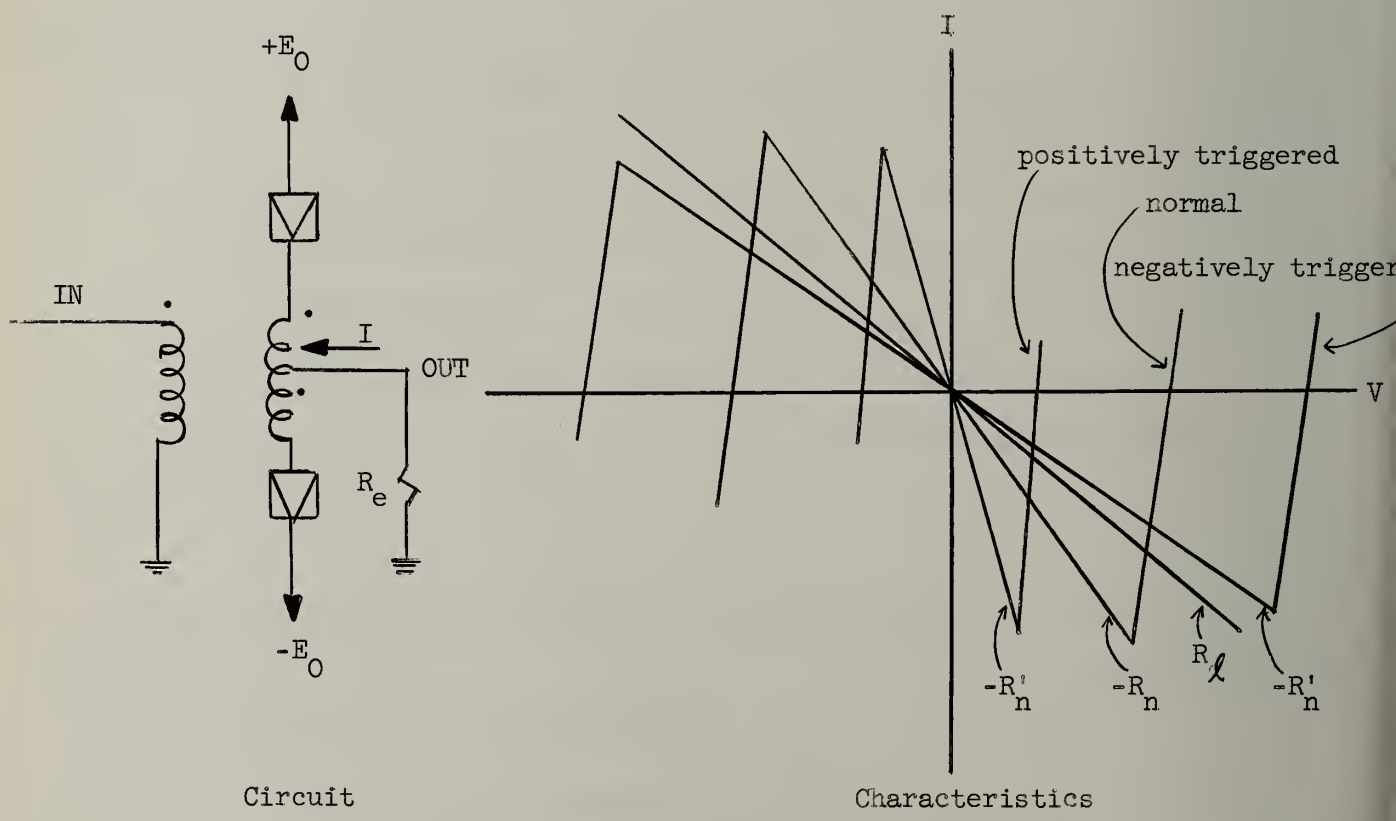

FIGURE 1. Negative Resistance Modulation

is obtained by controlling the current in the primary of the coupling transformer--the latter being actually a ferrite core with very few windings. In order to guarantee a minimum increment, it is obviously necessary to guarantee a maximum rise-time of the driving current.

A practical application of this negative resistance modulation is shown in Figure 2. If the load R_ℓ is chosen such that $R_n'' > R_\ell > R_n > R_n'$ (see Figure 1) it is evident that there are or are not 2 stable operating points depending on whether there is a positive trigger or a negative trigger increment. The insertion of an inductance L gives the circuit a flywheel effect such that whenever a negative trigger occurs, it is carried past the origin (the only dc-stable point!) toward the opposite stable point for a normal R_n: as soon as the trigger disappears, it actually attains this stable state.

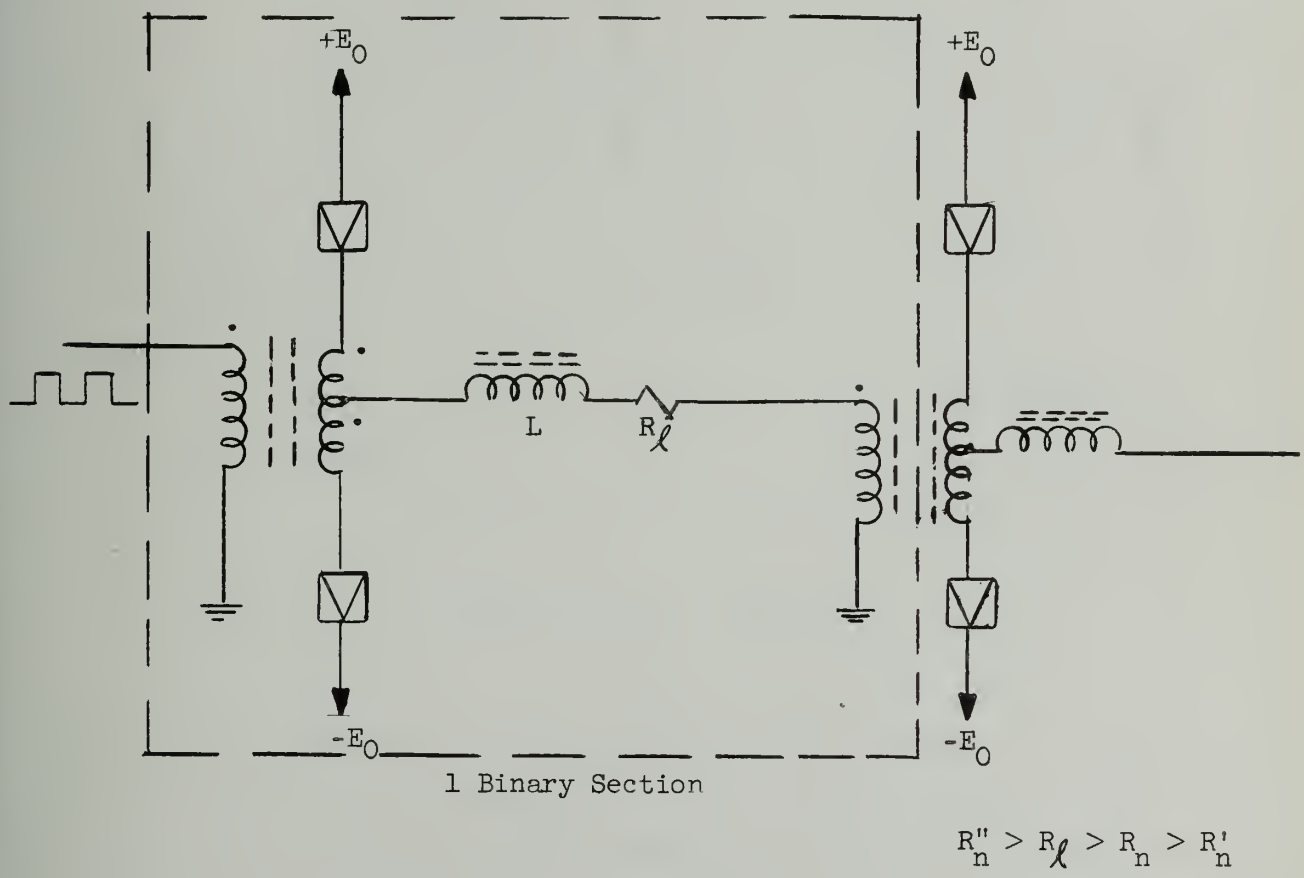

FIGURE 2. Counter Using Negative Resistance Modulation.

3.2. Bias Shifting

The in-phase application of increments to both E_0 and $-E_0$ of the circuit of Figure 3 obviously simply leads to a horizontal displacement of the characteristics, their slope $-R_n$ remaining constant.

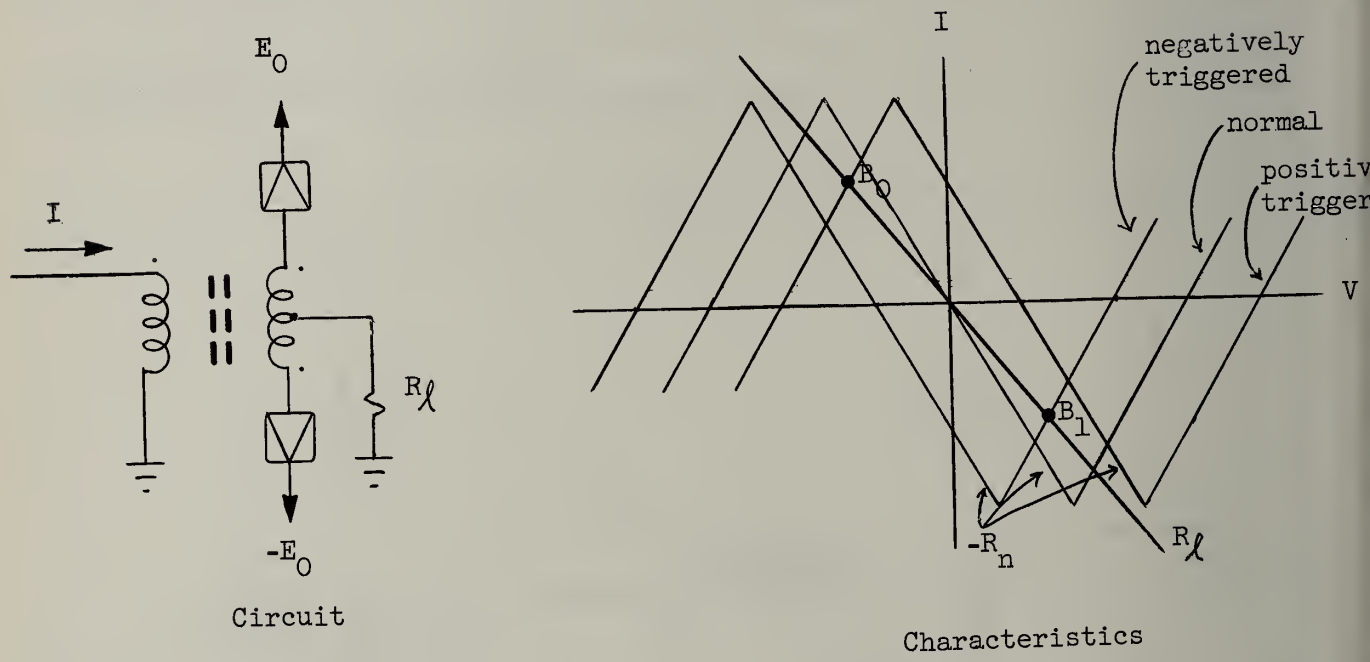

FIGURE 3. Bias Shifting.

Figure 4 shows the application of bias shifting to a pulse amplifier: depending on whether we trigger with a positive or a negative slope, the only stable state is B_0 or B_1. The horizontal distance between these two states is approximately constant and independent of the incoming trigger pulse--pulse amplification is therefore obtained.

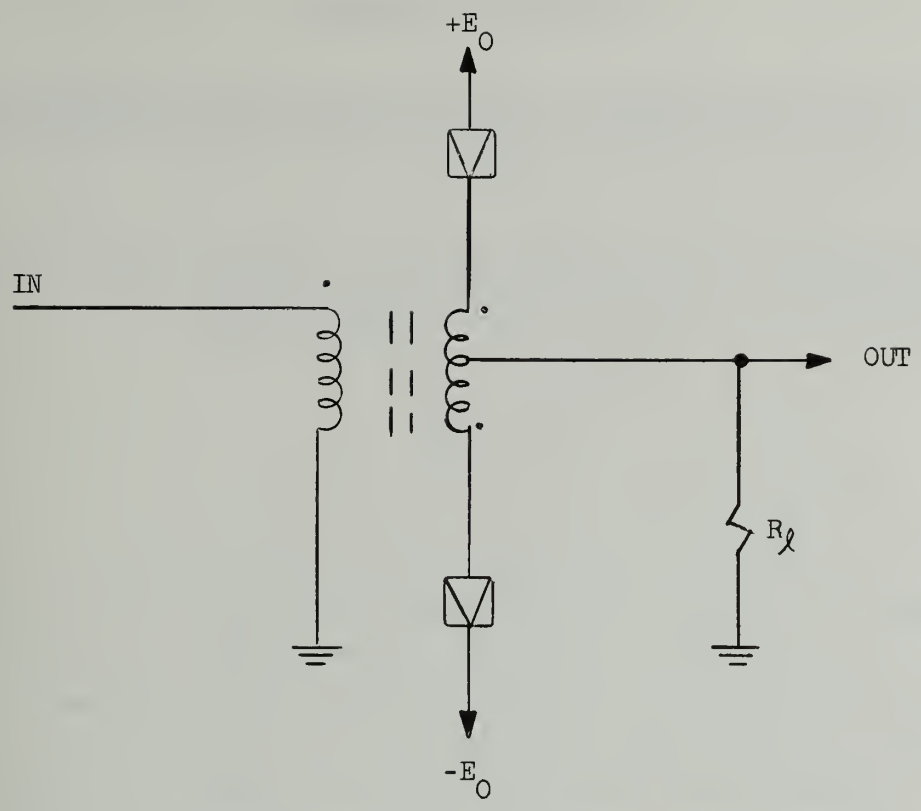

FIGURE 4. Pulse Amplifier

(T. Kunihiro)

PART III

MATHEMATICAL METHODS

1. The Gravitational Stress-Energy Tensor in an Approximate Theory of Gravitations
(Supported in part by the National Science Foundation under Grant G9503.)

The Einstein theory of gravitation may be approximated by an invariant theory in Minkowski space-time by considering the gravitational tensor $g_{\mu\nu}$ and the material tensor $T_{\mu\nu}$ as power series in the constant

$$k = \frac{8\pi G}{C^2}$$

where G is Newton's constant of gravitation and C is the velocity of light. The equations imposed on the various coefficients of these series by the Einstein field equations may be written in invariant form in Minkowski space-time.

It may be shown that up to second order terms the Minkowski divergence of the material stress energy tensor is equal to the divergence of a second rank symmetric tensor depending quadratically on the derivatives of the first order terms in the expansion of the $g_{\mu\nu}$. This latter tensor may be called the gravitational stress-energy tensor in this approximation.

It may be shown that its time-space components are similar but not equal to the components of Bondi's classical gravitational analogue to the Poynting vector.

The components of this stress-energy tensor are being evaluated for various special gravitational fields.

(A. H. Taub)

PART IV

ILLIAC USE AND OPERATION

New Illiac Codes

During the month of August, five new routines were added to the Illiac Library.

L 9 - 303 Solution of Linear Equations by an Iterative Method (SADOI only). This routine will solve a system of simultaneous linear equations

$$A\vec{x} = \vec{y}$$

where A is symmetric and positive definite.

The routine uses an iterative method. The time cannot be accurately predicted, since it is a function of the various parameters which must be chosen in order to use the routine. This routine will not be competitive with the elimination procedures used in Routine L 6 for equations of small order. However, it can become competitive for large equations, for sparse equations exploiting ingenious storage schemes, or for equations whose coefficients are internally generated by a subroutine.

(G. Golub)

V 12 - 304 Ordinary Bessel Functions (SADOI only). This routine calculates the Ordinary Bessel Functions, which are defined as follows:

$$J_n(z) = \sum_{m=0}^{\infty} \frac{(-1)^m z^{n+2m}}{2^{n+2m} m!\,(m+n)!}$$

$$N_n(z) = \frac{J_n(z) \cos n\pi - J_{-n}(z)}{\sin n\pi}$$

where n is an integer and is confined to M = 0, 1 in this routine. Either a single precision or a double precision argument is permitted.

(Marvin Harding)

KSL 5.02 - 306 <u>Multiplication of a matrix by its transpose; either $AA^T = C$ or $A^TA = C^*$.</u> The routine will read a matrix, A_{ij}, and form either $AA^T = C$ or $A^TA = C^*$ as specified by the parameter tape, where a superscript T indicates transposition.

(Freda Fischer)

E 8 - 307 <u>Integration by Weddle's Rule.</u> This routine uses Weddle's Rule to approximate an integral:

$$\frac{1}{b-a} \int_a^b f(x)\, dx \approx \frac{1}{20} \left[f_0 + 5f_1 + f_2 + 6f_3 + f_4 + 5f_5 + f_6\right]$$

where

$f_n = f(a + nh)$

is the value of $f(x)$ at $x = a + nh$ where $h = \frac{b-a}{6}$ and is tabulated at memory location $t + n$.

(John Ehrman)

E 9 - 308 <u>Closed (Newton-Codes) and Open (Steffensen) Quadrature (Numerical Integration for tabulated function values).</u> This routine calculates an approximation to the integral, using tabulated function values,

$$\frac{1}{b-a} \int_a^b f(x)\, dx \approx \frac{1}{D} \sum_{k=0}^{n} N_k f_k,$$

where

$$f_k = f\left(a + k \frac{(b-a)}{n}\right).$$

The closed and open quadrature cases are distinguished by the fact that N_0 and N_n are zero for open quadrature, and non-zero for closed quadrature. This means that an approximation to the integral can be computed when the terminal function values are not known.

To use this routine, the programmer will determine the number of intervals in his region of integration, and the type of quadrature desired. The coefficients appropriate to his choice are then copied from the second part of the library tape immediately following the program.

(John Ehrman)

Illiac Usage

During the month of August, specifications were presented for 17 new problems. This list does not indicate how the Illiac was used, because large amounts of machine time may have been consumed by problems with numbers less than 1757. Numbers followed by T are for theses.

1757T Physical Chemistry. Nuclear Magnetic Resonance. The Illiac may be used to calculate complex nuclear magnetic resonance spectra which calculation is very laborious and time consuming if done by ordinary means.

The program calculates the exact spectrum which should result from n nuclei of spin 1/2 having chemical shifts V_i and coupling constants J_{ij}. The computer performs the following operations in obtaining the solutions:

1. Calculation of a machine representation of the 2^n elementary spin-product functions of the form

$$\varphi_j = \prod_{i=1}^{n} I_z^{(i)}$$

where $I_z^{(i)}$ can be α or β.

2. Division of this set of elementary functions into subsets on the basis of total spin.

3. Computation of the spin-interaction matrix for each of these subsets, using the following formulae:

a. For diagonal matrix elements:

$$< \varphi_m | \mathcal{H} | \varphi_m > = \frac{1}{2} \sum_{i=1}^{n} S_i V_i + \frac{1}{4} \sum_{i<j}^{n} J_{ij} T_{ij}$$

where $S_i = -1$ if φ_m corresponds to spin α for nucleus i.

$S_i = +1$ if φ_m corresponds to spin β for nucleus i.

$T_{ij} = +1$ if φ_m corresponds to parallel spins for nuclei i and j.

$T_{ij} = -1$ if φ_m corresponds to anti-parallel spins for nuclei i and

b. For off-diagonal elements:

$$< \varphi_m | \mathcal{H} | \varphi_\ell > = \frac{1}{2} U J_{ij}$$

where U = 1 if φ_m and φ_ℓ differ only by interchange of the spins of nuclei i and j.

where U = 0 otherwise.

4. Calculation of the spectrum as follows:

The eigenvalues and eigenvectors of these matrices are computed by Illiac Library Route M4. If E_i is the ith eigenvalue for the matrix which arose from the set of functions of total spin k, and $a_{i\ell}^{k}$ the corresponding eigenvector, then the lines of the spectrum will have the frequencies

$E_i^{k} - E_j^{k-1}$ where i, j and k take on all values which actually correspond to eigenvalues.

The relative intensity of this line is

$\sum_{\ell,m}^{*} a_{i\ell}^{k} a_{jn}^{k-1}$ where the asterisk indicates that the summation is restricted to values of m and ℓ such that φ_m and φ_ℓ differ only by a single spin.

5. Simplification and print-out of the spectrum.

1758T Physics. Cross Section for Polarization of Bremsstrahlung. The experimentally measured polarization of bremsstrahlung is to be compared with the theoretical values. The theory is given in the form of algebraic equations involving double summations. These formulae are to be calculated for a wide range of the variables.

1759 Veterinary Pathology and Hygiene. Sera from both wild and domestic animals have shown positive antibody titers to leptospirosis. It will be possible to do statistical correlations of disease with such factors as age and sex using Illiac programs.

1760T Agronomy. Study of Height Mutants in Sorghum. A comparison is being made between nine different mutants and among plants within mutants. Analysis of variance is being utilized to test for differences in three characteristics, days from planting to anthesis, height in inches, and yield in grams.

1761 Veterinary Pathology and Hygiene. Q Fever Correlations. Sera from both wild and domestic animals have shown positive antibody titers to Q fever. It will be possible to do statistical correlations of disease with such factors as age and sex using Illiac programs.

1762 State Water Survey. Raindrop Evaporation. The program uses equations for calculations of evaporation of raindrops. Two simultaneous differential equations are solved using library routine (F1).

Routine (L3) is used to solve three sets of linear equations. These coefficients will then remain constant and will be used as a part of the parameters for the main program.

The results of the program will be used to better relate cloud droplet size distributions to raindrop size distributions measured at the ground.

1763 Institute for Research on Exceptional Children. Efficacy of Special Education Classes for Mentally Retarded Children. A study of the efficacy of special class training for educable mentally handicapped children is to be ironed out. Retarded children were randomly assigned to experimental and control classes. During the past year, various intelligence and achievement tests were administered to the two groups.

Illiac is to be used to determine correlations between and within the two groups of children.

1764 Institute of Labor and Industrial Relations. Executive Aptitudes Research. Sixty-eight business executives have taken a number of aptitude tests, yielding a total of 28 scores for each executive. The problem is one of inter-test correlation and inter-scorer reliability. To investigate this problem, an intercorrelational matrix is computed.

1765 Economics. Percentage of Income Allocated to Education. This is part of a study of the percentage of income that society allocates to public primary and secondary education. Several hypotheses derived from a theoretical framework are being tested with 1955-56 inter-state data; this is the last year for which data is available. Multiple regression techniques are being used, much of the work is already done, and remaining work is largely concerned with testing correlation between residuals and regressors.

1766T Chemistry. Neighboring Group Participation. This problem will make a least squares fit to data. The data fit the equation

$$t = \text{constant} - k \ln (a - x)$$

where values of t and ln (a - x) are given, k is to be determined by the method of least squares.

This research problem is a kinetic study of the unimolecular solvolyses of some β-chlorosulfides in aqueous organic solvents. Their first-order rates are given by the above equation, where t = time and (a - x) is the concentration of β-chorosulfide at time t.

1767 Digital Computer Laboratory. Single Slit Diffraction. This program will compute the diffraction pattern resulting from the incidence of plane waves on a single slit. The computation is performed by a Monte Carlo process in which a random walk, based on Huygen's principle, takes place from the slit to the screen being illuminated. The object of this study is to get estimates for various parameters of the Monte Carlo process which are necessary for producing a sensible pattern.

1768T Agricultural Economics. Regression Analysis of Farm Real Estate Prices. The research problem is an analysis and comparison of farm real estate sales with the earned value of farm real estate, using Farm Bureau Farm Management Services records. The Illiac is to be used for a regression

analysis of the differences between earned value of farm real estate (source--Farm Bureau Farm Management records) and farm real estate sales during the 1957-58 period.

1769T Civil Engineering. Stress Wave Propagation in Visco-Elastic-Plastic Materials. Prior computer programs have been used to investigate one dimensional stress wave propagation problems in soil. The resistance subroutine will be modified slightly to include stress-strain relations which exhibit increasing stiffness with increasing strain. Slight modifications will also be made to the boundary conditions.

The purpose of these changes is to study the effect of stress-strain relationships and viscosity on stress wave propagation in a small diameter soil column. The input force pulse is taken to be representative of a nuclear blast pulse.

1770 Electrical Engineering. Space Diversity Investigation. This is an investigation of the effects of antenna spacing and frequency on diversity radio direction finding. The necessary spacing of antennae as a function of frequency, wave propagation conditions and time of day so as to produce relatively uncorrelated samples at each array will be determined. By varying each quantity in question independently and calculating direction of arrival of the waves one calculates the mean bearing, standard deviation and cross-correlation coefficient to obtain experimental measures of the effects of each quantity on the statistical behavior of the bearings measured by spaced arrays.

1771 Coordinated Science Laboratory. Monte Carlo Phase of Signal Detection Studies. Direct simulation is used in a Monte Carlo study of a signal detection problem in which only phase information is exploited. Illiac is used to generate, process and test the appropriate stochastic sequences, and to collect and reduce the statistical data produced.

1772T Education. Relationship between Success in Counseling and Discrepancy in Levels of Personality. The basic idea to be investigated in this problem is concerned with the relationship between the discrepancies in levels of personality as measured prior to counseling and as measured

after counseling. As a prior step to the analysis of the main body of data, a further analysis of some previous data must be made. An original hypothesis predicted a positive and significant relationship between the amount of inter-level personality conflict and the degree of emotional disturbance in individuals The analysis was generally interpreted to be negative, in that only one general factor accounted for 85 per cent of the variance of six of the seven variables. Thus, it was concluded that various levels of personality were not represented in the test data. However, a factor analysis of all 12 of the variables used in the original study indicates that these levels may exist, but not in the way the data were ordered.

Thus, factor scores for each of the subjects in the original data must be obtained in order to test the hypothesis that there are levels of personality represented in that data and to further investigate correlations between these factor scores and the criteria. This will test whether there is a relationship between a discrepancy in levels of personality and emotional disturbance.

1773T Chemistry. Least Squares Analysis. Sedimentation data have been obtained at 20 different temperatures for the protein ribonuclease. The data were obtained by use of a Spinco Ultracentrifuge. The following data were obtained: $F(x) = \log (r_m (t_n)/r_m (t_1))$ and $x = (t_n - t_1)$, where $r_m (t_n)$ = distance of sedimenting boundary from the center of revolution at a time t_n. $r_m (t_1)$ = distance of sedimenting boundary from the center of revolution at the time of the initial photograph, t_1. t_n = time at which the nth photograph was taken, t_1 = time at which the first photograph was taken, and $(t_n - t_1)$ = time interval between 1st and nth photograph. The sedimentation coefficient is then given as the slope of a plot of F(x) vs x. Ordinary graphical methods will not yield the accuracy desired in this case and are also too lengthy in view of the rather large amount of data.

Since $r_m (t_n)$ and $r_m (t_1)$ are nearly equal, the approximation $\log r_m (t_n)/r_m (t_1) = \Delta r/r_1$ is a very good one; $\Delta r = (r_m(t_n) - r_m(t_1))$. Thus, with this approximation, the data are suitable to a least squares analysis.

A function of the form $F(x) = a_o + a_1 x$ will be assumed. Using Library Routines K-3 and L-7 and the experimental data the Illiac will produce both a_o and a_1. The slope, a_1, is equal to the sedimentation coefficient of

ribonuclease. The intercept, a_o, is believed to be a function of the protein's diffusion coefficient, but the relationship is not clearly understood; it is hoped that an accurate analysis of the data by the above manner may elucidate this relationship.

Table I shows the distribution of Illiac machine time for the month of August.

TABLE I

	Hrs:Min	
Scheduled Maintenance	65:41	
Unscheduled Maintenance	56:45	
Drum Engineering	3:25	
RAR	:10	
Leapfrog	6:07	
Library Development	4:27	
Demonstrations	:51	
		137:26

Use by Departments

Agricultural Economics	14:41
Agronomy	4:46
Animal Science	3:14
Bureau of Educational Research (PH-M1839)	:47
Bureau of Educational Research	8:02
Chemistry (NSFG-5907)	2:59
Chemistry (NONR 1834(13))	2:01
Chemistry (NSFG 7336)	14:37
Chemistry	68:55
Coordinated Science Laboratory (DA-36-039-SC56695)	50:26
Digital Computer Laboratory (AEC AT(11-1)-415)	9:20
Digital Computer Laboratory (NSF GRANT 9503)	17:26
Digital Computer Laboratory (NONR 1834(27))	:24
Digital Computer Laboratory	20:22
Economics (NSFG 7056)	3:39
Economics	2:27
Education	10:23
Electrical Engineering (NASA - NSG 24 - 59)	3:21
Electrical Engineering (NSFG 7421)	1:14
Electrical Engineering (NSF 7040)	7:08
Electrical Engineering	13:37
Food Technology	1:36
Geology	1:34
Institute for Research on Exceptional Children	:46

Inst. of Communications Research (44-28-20-378)	3:35	
Inst. of Comm. Res. (USPHM-3941 46-28-20-364)	3:57	
Institute of Communications Research	1:21	
Institute of Labor and Industrial Relations	:30	
Mathematics	:03	
Mechanical Engineering	16:34	
Medicine	:57	
Mining and Metallurgical Eng. (TRUS AF6770)	:08	
Physics (NONR 1834(05))	11:58	
Physics (General Elect. Fellowship)	2:48	
Physics (AF 49(638)-529)	:08	
Physics	7:58	
Psychology (AF 49(638)371)	22:25	
Psychology	62:03	
Sociology	4:45	
State Geological Survey	:24	
State Water Survey (DA-36-039-SC75055)	1:55	
State Water Survey	4:20	
Structural Research (NSF-G6572)	2:26	
Structural Research (AASHO ROAD TEST)	3:59	
Structural Research (NONR 1834(03)	1:27	
Structural Research (AF 29(601)-2591)	4:23	
Structural Research (CAT. TR. CO. 442-220-310)	:06	
Structural Research	31:36	
Student Counseling	:09	
Theo. and Appl. Mech. (DA-11-070-508 ORD 593)	7:51	
Theo. and Appl. Mech. (AF(616)6643)	1:21	
Theo. and Appl. Mech. (NOBS 72069)	:15	
Zoology	8:00	
Cornell University	:19	
U. S. Navy Personnel Service	3:06	
		474:32
		611:58

Error Frequency and Analysis

The machine is normally used for "engineering" and maintenance between 7:00 a.m. and 10:30 a.m. Since the periods between 7:00 a.m. and 10:30 a.m., together with certain irregular periods, such as Saturdays and Sundays, are devoted to a heterogeneous group of engineering, maintenance and laboratory functions, it is more instructive, from an error standpoint, to look at the periods between 10:30 a.m. and 7:00 a.m. of the next day in order to make an observation of the error frequency in the machine. This is the actual period when the machine is designated for use, although certain engineering procedures frequently require the scheduling of extra maintenance time. With this in mind, a summary table has been prepared using the period between 10:30 a.m.

and 7:00 a.m. of the next day. This table lists the running time when the machine was operating, the amount of time devoted to routine engineering, the amount of time devoted to repairs because of breakdowns, and a number of failures while the machine was listed as running. Each failure was considered to have terminated a running period and was followed by a repair period in preparing this table. Since the leapfrog code is our most significant machine test, the length of time which it has been used on the machine is listed separately, together with the number of errors associated with that particular code. This information for the month is presented in Table II.

It is important to notice that, except during scheduled engineering periods, any interruption of machine time that was not planned is considered a failure in this table. In rare cases, where the failure is not known until a later time, it is possible that no repair period is associated with the failure. This over-all system has been adopted because it makes it possible for a machine user to estimate directly the probability that the machine will be "running" any instant of time and the probability of a failure during any given interval of running time.

TABLE III

Memory	5
Control	3
Drum	3
Reader	2
Punch	5
Unknown	1
Total	19

TABLE II

DATE	RUNNING OK TIME	REPAIR TIME	SCHEDULED ENGINEERING	INTERRUPTIONS OR FAILURES STOPPING OK TIME	TYPES OF INTERRUPTIONS OR FAILURES CAUSING REPAIR TIME	WASTED	LEAPFROG	FAILURES STOPPING LEAPFROG
8/1/60	17:48	2:50	3:22	3	(1) Reader "J" Error (2) Memory Failure 2^{-7} (3) Drum Failure	:00	:46	0
8/2/60	21:09	:00	2:51	0		:00	:40	0
8/3/60	19:13	1:40	3:07	1	(1) Memory Failure 2^{-11}	:00	:20	0
8/4/60	21:26	:00	2:34	0		:00	:20	0
8/5/60	21:10	1:05	1:45	3	(1) Unknown (2) Punch Error (3) Punch Error	:00	:20	0
8/8/60	17:27	2:59	3:34	1	(1) Control Error	:00	:20	0
8/9/60	21:07	:06	2:47	1	(1) Punch Error	:00	:21	0
8/10/60	20:34	:05	3:21	1	(1) Punch Jammed	:00	:20	0
8/11/60	18:31	3:43	1:46	1	(1) Drum Failure	:00	:00	0
8/12/60	21:52	:00	2:08	0		:00	:21	0
8/15/60	20:57	:00	3:03	0		:00	:00	0
8/16/60	19:23	1:32	3:05	2	(1) Memory Failure 2^{-25} (2) Reader "B" Failed	:00	:30	0
8/17/60	:01	21:29	2:30	1	(1) Computer down 24 hours. Pulsers bad. Control error.	:00	:00	0
8/18/60	15:27	5:18	3:15	2	(1) Continuation of trouble on 8/17/60 (2) Memory Failure 2^{-18}	:00	:06	0
8/19/60	21:44	:07	2:09	1	(1) Memory Failure 2^{-5}	:00	:05	0

DATE	RUNNING OK TIME	REPAIR TIME	SCHEDULED ENGINEERING	INTERRUPTIONS OR FAILURES STOPPING OK TIME	TYPES OF INTERRUPTIONS OR FAILURES CAUSING REPAIR TIME	WASTED	LEAPFROG	FAILURES STOPPING LEAPFROG
8/22/60	9:39	10:51	3:30	1	(1) Drum Failure	:00	:20	0
8/23/60	21:04	:00	2:56	0		:00	:20	0
8/24/60	21:42	:00	2:18	0		:00	:25	0
8/25/60	21:10	:11	2:39	1	(1) Punch Failure	:00	:20	0
8/26/60	21:26	:00	2:34	0		:00	:00	0
8/27/60	24:00	:00	:00	0		:00	:00	0
8/28/60	24:00	:00	:00	0		:00	:00	0
8/29/60	21:11	:00	2:49	0		:00	:20	0
8/30/60	21:45	:00	2:15	0		:00	:00	0
8/31/60	20:52	:00	3:08	0		:00	:00	0
TOTALS	484:38	51:56	63:26	19		:00	6:14	0

PART V

IBM 650 USE AND OPERATION

IBM 650 Usage

During the month of August, specifications were presented for 16 new problems. This list does not indicate how the IBM 650 was used because large amounts of machine time may have been consumed by problems with numbers less than 147'T. Numbers followed by T are for theses.

147'T Music. Analysis of Auditory-Visual Discrimination. The product moment correlation routine will be used to give Means, Standard Deviations, Corrected Sums of Squares and Products from data collected on some 3,000 who were participating in Elementary and High School music programs. Students tested were taken from grades 5 through 12. Approximately 40 10 x 10 correlation matrices will be needed to compare the various effects of music programs, amount of practice, piano vs. non-piano groups, etc.

148' Office of Research in Medical Education. Study of College of Medicine Faculty and Senior Students. A comparison of basic science and clinical faculty scores on 16 variables of the Edwards preference schedule, on 6 variables of the Allport-Vernon-Lindzey study of values, and 6 variables of a teaching attitudes inventory will be made. A comparison of senior medical students' scores in 1960 on the Edwards personality preference schedule with their scores on the same instrument in 1956, and a study of the scores of senior students in 1960 on the Allport-Vernon-Lindzey study of values will also be made.

149'T Education. The Efficacy of a Defined Reading Readiness Program for the Mentally Handicapped. This is a study of the effectiveness of a given reading readiness program in the training of young mentally retarded children in the Binet IQ range of 60 through 85.

The sample is composed of mentally retarded children in their first year of school randomly divided into experimental and control groups. The 51 experimental subjects were placed in special classes set up for that purpose, while the control children remained in their regular first grade placements

without alteration of program. Complete data were obtainable on 49 controls, for a total N of 100 children. The measures on each child included pre- and post-tests on the Stanford-Binet and the Primary Mental Abilities tests. At the end of the school year the Lee-Clark Reading Test, primer level, and three sub-tests of the Harrison-Stroud Reading Readiness Profiles were administered. Experimental subjects were rated on a social adjustment scale designed for that purpose. Sub-test and total test scores, information on sex, race, community and chronological and mental age present a total of 50 variables.

The primary statistical method will be analysis of covariance to determine the relative differences between the experimental and control groups at the end of the training period, and in their change scores. The total experimental and control groups will also be analyzed in terms of differences between 3 area sub-groups into which the sample is divided. Intercorrelations between most of the 50 variables will be studied to isolate differences between the groups attributable to educational placement and teaching method. Machine calculations will be used to compute the intercorrelations and to provide the factors used in the analyses of covariance.

150' Admissions and Records. Grade Reporting. This program will be developed to do the grade reporting for the undergraduate colleges. The present grade reports will be produced on the 650 with added outputs such as semester and cumulative grade point averages, drop and probation liability notices, and missing grade cards.

At certain times during the semester a student control tape will be created and updated from statistical cards. Other information will be combined with the statistical data to complete the master control tape. At the end of the semester the grade cards will be combined with the information on the master control tape to obtain the grade reports with the added information.

The tapes created each semester will contain statistical information for studies desired by the Office of Admissions and Records.

151'T Chemistry. Calculation and Comparison of Molecular Effusion Parameters from Theory and Experimental Data. The research problem involves the measurement of the intensity of molecules effusing from orifices of various geometric shapes as a function of the angle from the normal to the plane of the orifice. The experimental data consist of ion current readings, I_θ, at

several points located at a fixed distance, r, from the orifice which make different angles, θ, with the normal to the plane of the orifice opening, such that $0 \leq \theta \leq 90$ and $\Delta\theta = 1$. Four orifices have been studied. Each orifice was studied by 25 runs. A run consisted of 90 readings.

For each I_θ calculate

$$G_\theta = \frac{\int_0^\theta I_\theta \sin\theta \, d\theta}{\int_0^{\pi/2} I_\theta \sin\theta \, d\theta}$$ where c is a geometrical constant

$$P_\theta = \frac{I_\theta}{2\pi \int_0^{\pi/2} I_\theta \sin\theta \, d\theta}$$

$$2\pi \rho_\theta \sin\theta$$

For each run calculate

$$N = 2\pi C \int_0^{\pi/2} I_\theta \sin\theta \, d\theta$$

For the right cylinder orifice G_θ, P_θ, and $2\pi\rho_\theta \sin\theta$ will be calculated using the Clausing Theory. An improved version of the Clausing Theory will be used to calculate G_θ, P_θ, and $2\pi\rho_\theta \sin\theta$.

Comparison within each theory, between theories, and between theory and experiment will be made by finding the differences

$$P_\theta - P_{\theta \text{ reference}}$$

$$G_\theta - G_{\theta \text{ reference}}$$

and $$(2\pi\rho_\theta \sin\theta) - (2\pi\rho_\theta \sin_\theta) \text{ reference}$$

152'T Civil Engineering. Plastic Design of a Haunch. A tapered beam of I section, subjected to a linearly varying moment, will have a plastic hinge form in a location which depends upon several parameters. The theoretically best design will be the one which uses minimum material.

At the location of the plastic hinge, for minimum material consumption: (1) applied moment equals resisting moment, and (2) the derivative, with respect to distance along axis, of applied moment equals derivative of resisting moment.

The assumptions of simple plastic theory (e. g., no shear) will be used.

Let b = flange width; $b = b_a - m(\ell_{ac} - x)$; m = constant

t_f = flange thickness; t_f = constant

c = half-depth of beam; $c = c_a - n(\ell_{ac} - x)$; n = constant

t_w = web thickness; t_w = constant

x = distance along beam axis from point of zero M.

M_a = maximum applied moment

a = point of maximum moment

H = point of plastic hinge

σ_y = yield point of material

Defining the following dimensionless quantities:

$$\alpha = \frac{t_f}{c_a}, \quad \beta = \frac{t_m}{c_a}, \quad \Gamma = \frac{\ell_{ac} - x_H}{\ell_{ac}}, \quad K = \frac{M_a}{\sigma_y c_a^3}$$

$$N = \frac{n\,\ell_{ac}}{c_a}, \quad M = \frac{m\,\ell_{ac}}{c_a}, \quad \gamma = \frac{b_a}{c_a}, \quad D = \frac{c_H}{c_a}, \quad V = \frac{\text{volume}}{\ell_{ac} c_a^2}$$

The volume of material is:

$$V = 2\gamma\alpha + \beta(2 - 2\alpha - N) - M\alpha$$

where

$$\gamma = M\Gamma + \frac{1}{\alpha}\left[\frac{K}{2N} - \beta(D - \alpha) - \frac{M\alpha}{2N}(2D - \alpha)\right]$$

$$D = 1 - N$$

and N is determined from:

$$N^3 - \frac{\beta(2-\alpha) - 2M\alpha\Gamma}{\beta} N^2 - \frac{2M\alpha(2-\alpha)\Gamma - \beta(1-\alpha) - K}{\beta\Gamma^2} N - \frac{(2-\alpha)\left[K - M\alpha(2-\alpha)\right]}{2\beta\Gamma^2} = 0$$

where M, α, β, Γ, and K are given fixed values.

The computer will be used to find V for various values of M, α, β, Γ, and K.

153' Bureau of Educational Research. Analysis of Sociograms Using Matrix Algebra. Teachers in a school talk to each other about guidance and counseling with different frequencies. The input cards are punched with equivalents of so-many-conversations-per month between each pair of persons. The problem is to find groups in the faculty characterized by a given density of communication. The analysis utilized matrix algebra to find persons sharing a given degree of connectedness.

This analysis will use routine developed under problem number 79'.

154'T Bureau of Educational Research. A Study of the Cognitive Merit of Teachers. This research problem is a preliminary attempt to construct a standardized test to measure the attitude of teachers. Three inventories were administered to about 4,000 students and 147 teachers in the State of Illinois. Most of this data has been processed on University of Illinois Digital Computer (Illiac) in the last few months. The analysis of data at the Illiac lead to some very significant findings in the area of our interest. It is now further planned to do item-analysis mainly using the Pearson-r^s between factor scores of teachers, which were obtained from the Illiac and the 364 tests given to the teachers.

155'T Agricultural Economics. Regression Analysis. This program will estimate the relationship between soil productivity ratings determined from detailed soil maps and the productivity rating ascribed to the same area by Farm Bureau - Farm Management fieldmen.

156'T Civil Engineering. Long Reinforced Concrete Columns. It is intended to study numerically the behavior of various reinforced concrete columns, under eccentrically applied loads. The actual study will involve numerical integration of the curvature diagram for the column, with a determination of deflections at various discrete points. Because of the nonlinearity of the moment-curvature relationship for reinforced concrete members, convergence techniques will be required.

As a preliminary to the actual program, it will be necessary to develop moment curvature relationships for the columns under consideration.

157' Political Science. Agricultural Bills and Congressional Voting. This project is a matrix analysis of roll call votes in the national House of Representatives for 12 mid-west states. The subject matter of the study is the total of roll call votes for the second session of the 83rd Congress and subsequent sessions through the first session of the 86th Congress, a total of 6 sessions.

The product of the analysis will be a series of tables showing the frequency of agreement and disagreement between representatives on specified agricultural bills. The results of the second phase will be compared with the initial tables in order to isolate those representatives showing a greater tendency to vote together on agricultural measures than they demonstrated on all roll call votes. This phase of the project is thus designed to determine the existence, or non-existence, of an agricultural "bloc" in the House, i. e., insofar as the roll call votes furnish evidence of support of particular agricultural policies.

The Chi square test will be used to measure dependence between congressmen from rural, urban, and agricultural areas.

158'T Dairy Science. The Effect of Stress on Reproduction and Sex Ratio in the Rat. The nature of the problem is to study the effects of some various stresses on the efficiency of reproduction in the female rat and also to study some effects of these treatments on the secondary sex ratio.

The IBM 650 will greatly facilitate the statistical analysis of this problem by an analysis of variance and covariance using standard library routines.

159' Chemistry. Quadrupole Coupling in Ionic Molecules. This problem is a continuation of 130' for the calculation of quadrupole coupling constants in ionic molecules. Hartree-Foek atomic functions are first interpolated from standard tables by I1'-48'. The resulting functions are then used in a two-center problem, with the function on one center being expanded about the other by the α function technique of Lowdin.

160'T Civil Engineering. Planning Construction Operations for Earthwork in Highway Construction. This problem will consist of two programs:

PROGRAM 1: Multi-service counter queueing program. A table of non-dimensional numbers for average waiting periods and probabilities that no units are in a queue will be formed for arrival time to servicing time ratios of 1.30 to 7.23 (in increments of 0.01) for 1 to 20 servicing units for a Poisson distribution on "arrivals" and a Laplace distribution on "servicings". This program can be used to generate queueing tables for any populations with the distributions described above.

PROGRAM 2: A large scale algorithm for linear programming. A technological set of restrictions consisting of 30 equations (rows) and 300 variables (columns) will be written for maximizing and/or minimizing an objective function. The program will involve tape units. This program will be available for general use for any large scale linear program.

PROGRAM 1: The following mathematical equations will be solved:

$$P_o = \frac{1}{\sum (\lambda/\mu)^n/n! + \left\{(\lambda/\mu)^s/\left[s!\,(1 - \lambda/\mu s)\right]\right\}}$$

$$T = \frac{P_o}{s\mu\,(s!)\left[1 - \lambda/\mu s\right]^2}(\lambda/\mu)^s$$

$$1.30 \leqslant (\lambda/\mu) \leqslant 7.23$$

$$0 < S \leqslant 20 \text{ for each } (\lambda/\mu)$$

PROGRAM 2: Using matrix notation -

Maximize (or minimize) X
for $AX \leqslant B$
and $X \geqslant 0$

161'T Horticulture. Study of Potassium on Apple Trees. This problem is concerned with a study of potassium absorption and distribution on one year old apple trees. Several different applications of nutrient solution were applied to the trees to determine their effects on the composition of the trees, the rate of growth of the trees, and the total growth of the tree. Information concerning the potassium content of apple trees at different stages during the growing season, the distribution of potassium in different parts of apple trees (i.e. shoots, leaves and roots) during the growing season, and the effects of calcium on potassium absorption and distribution will also be obtained from this study.

The mathematical principles and procedures involved are analysis of variance of a randomized complete block design.

162'T Agronomy. Effect of One Mutant Gene on Yield in Sorghum. Four hybrids were made with normal female parents and heterozygous male parents. The progeny were segregated in the field planting giving unequal numbers per plot in the two groups which are being compared. The field planting was a randomized complete block with 4 replications. Analysis of variance will be used to calculate within-plot variances.

Table I' shows the distribution of the IBM 650 machine time for the month of August.

TABLE 1'

		Hrs:Min	
Regular Maintenance		21:52	
Unscheduled Maintenance		4:02	
Library Development - DCL		:34	
Log Summation		:31	
Classes		18:20	
Math 295	18:20		
Wasted		23:20	
			68:39

Use by Departments

Agricultural Economics		3:41
Animal Science		1:41
Chemistry		13:10
Civil Engineering		6:33
Electrical Engineering		:18
Graduate College		8:58
Mining and Metallurgical Engineering		16:34
Psychology		:47
State Water Survey		6:42
Statistical Service Unit		86:55
Admissions and Records	:10	
Agricultural Extension	:46	
Bureau of Educational Research	21:00	
Bursar's Office	6:13	
Business Office	4:26	
College of Medicine	1:50	
Dairy Science	10:44	
DHIA	25:44	
Education	3:53	
Forestry	:11	
Music	3:18	
Political Science	:24	
Student Counseling Service	8:16	
		145:19
		213:58

Error Frequency and Analysis

The IBM 650 is normally on from 8:00 a.m. to 5:00 p.m. The machine is used for preventive maintenance from 8:00 a.m. to 12:00 noon on Mondays.

Table II' gives the daily breakdown of machine time with respect to wastage and unscheduled maintenance.

Table III' presents a summary of errors for August.

TABLE III'

Storage selection	1
Last bits	2
Index registers	2
Tape units	1
Tape read or write errors	8
533	5
407	5
TOTAL	24

TABLE II'

DATE	RUNNING OK TIME	SCHEDULED ENGINEERING	REPAIR TIME	WASTED	FAILURES STOPPING OK TIME	AIR CONDI-TIONING	TYPES OF FAILURES CAUSING REPAIR TIME
8/1/60	4:38	3:30		:52	1		(1) Storage selection on drum clear.
8/2/60	5:06		1:36	2:51	2		(1) 533 read feed check light stays on when cards are in punch hopper. (2) Col 68 of cards not reading.
8/3/60	7:15		:21	1:34	1		(1) Card jam in 533.
8/4/60	13:14			:52	1		(1) Program register lost a binary bit in pos 10.
8/5/60	8:54			:14	0		
8/8/60	4:02	3:48		1:10	0		
8/9/60	6:18		:20	2:27	2		(1) Error in index register. (2) 407 on line fails to print minus sign when called for and sometimes prints one when not called for.
8/10/60	8:19			:51	0		
8/11/60	8:42			:27	1		(1) Error in index register A.
8/12/60	8:23		:03	:34	1		(1) Fuse blew in 407.
8/15/60	1:26	7:09		:25	0		(Scheduled engineering was extra long due to low demand for computer time. A bad bearing was replaced in 533, which had not yet caused any trouble).
8/16/60	7:32			1:33	5		(1) Tape head on unit 3 would not come down. (2)-(3)-(4)-(5) Reading errors on tape.

DATE	RUNNING OK TIME	SCHEDULED ENGINEERING	REPAIR TIME	WASTED	FAILURES STOPPING OK TIME	AIR CONDI-TIONING	TYPES OF FAILURES CAUSING REPAIR TIME
8/17/60	7:07			2:00	0		
8/18/60	8:57		:01	:10	3		(1) Word 2 on 407 sporadically does not print. (2) Bit 9 of position 10 in program register lost. (3) Card jam on 533 read.
8/19/60	6:22			2:43	4		(1)-(2)-(3) Tape unit 3 had three read or write errors. (4) Tape unit 1 had one read or write error.
8/22/60	3:39	3:30		1:51	0		
8/23/60	8:04			:56	0		
8/24/60	8:48			:22	0		
8/25/60	8:41		:07	:14	1		(1) Card jam on 533 read.
8/26/60	7:31		1:04	:25	0		Engineering is for removing and checking a tape unit.
8/29/60	4:50	3:55		:15	0		
8/30/60	8:51			:09	0		
8/31/60	8:05		:30	:25	2		(1)-(2) 407 on line printing 5 instead of 2 and - instead of 8 at random location.
TOTALS	164:44	21:52	4:02	23:20	24		

PART VI

GENERAL LABORATORY INFORMATION

Personnel

The number of people associated with the Laboratory in various capacities is given in the following table:

	Full-Time	Part-Time	Full-time Equivalent
Faculty	8	-	8.0
Visiting Faculty	2	-	2.0
Research Associates	1	-	1.0
Graduate Research and Teaching Assts.	17	6	10.9*
Graduate Fellows	-	-	-
Administrative and Clerical	5	-	5.0
Other Nonacademic Employees	31	4	34.0
Totals	64	10	60.9

* Most assistantship appointments end on August 15.

The Laboratory Advisory Committee consists of Professors H. C. Brearley, L. D. Fosdick, D. B. Gillies, G. A. Metze, B. H. McCormick, D. E. Muller, T. A. Murrell, W. J. Poppelbaum, J. E. Robertson and J. N. Snyder.

UNIVERSITY OF ILLINOIS

GRADUATE COLLEGE

DIGITAL COMPUTER LABORATORY

TECHNICAL PROGRESS REPORT

PART I - HIGH-SPEED COMPUTER PROGRAM

PART II - CIRCUIT RESEARCH PROGRAM

PART III - DATA REDUCTION METHODS

PART IV - ILLIAC USE AND OPERATION

PART V - IBM 650 USE AND OPERATION

PART VI - GENERAL LABORATORY INFORMATION

September, 1960

PART I

HIGH-SPEED COMPUTER PROGRAM

This work is supported in part by Contract No. AT(11-1)415 of the Atomic Energy Commission and in part by the University of Illinois. Contract No. AT(11-1)415 is supported jointly by the Atomic Energy Commission and the Office of Naval Research.

1. Physical Aspects of Machine Construction

1.1 Chassis Module

The plug-in connections on the chassis module have been chosen to be a cast frame (male and female) with knife blade connectors around the periphery. A sample module has been received. A number of changes are necessary before orders for module parts can be placed.

1.2 Small Parts

In the chassis construction there are three parts of the mechanical structure of which many hundreds each will be used in the new machine. Drawing A-2001 (the center telephone poles), A-2002 (the end telephone poles), and B-2003 (terminal strip) show these parts. In the core memory two types of transistors require heatsinks. These heatsinks are shown in Drawings A-2004 (2N706 transistor), A-2005 (2N1072 transistor).

It was decided to have these parts manufactured commercially. Quotes are to be obtained on quantities as follows:

A-2001	1000 units
A-2002	2000 units
B-2003	1000 units
A-2004	500 units
A-2005	1000 units

1.3 Main Arithmetic Unit

The physical placement of chassis in the main arithmetic unit both for center wall and outer walls was fixed. One QRM chassis has been completed except for diodes. The adders in A-chassis and S-chassis have been changed to the new design described in the August monthly report.

(C. E. Carter, H. E. Lopeman,
T. E. Kerkering)

2. Shift-Unit #2

2.1 Construction

a) One quarter word of flow-gating was constructed in the shop to be used as a test register on shift-unit #2.

b) The new adder, described in the August monthly report, was constructed for test on the unit.

c) One each (AND-NOT) and (AND-NOT-REPLY) Eccles Jordan was constructed for test on shift-unit #2.

d) A zero detect accumulative (OR) circuit was wired on the shift-unit using 20 bits or 5 chassis.

2.2 Circuit Testing

The new adder was placed in operation on the shift-unit #2 on September 20. This unit was so wired as to add a single base four position but had enough extra inputs so as to give a true carry into the base four position. The adder time (including setting of F-elements) was found to be 90 mμsec.

Two new memory elements were tested. The (AND-NOT) Eccles-Jordan and the (AND-NOT) Eccles-Jordan with reply. The times were better than for any other now used memory element. The reply was very slow, between 60 and 70 mμsec.

A hurry-up check of a zero detect circuit consisting of an accumulation of (OR) circuits showed that restoring and bumping will be necessary to dampen the overshoot.

(C. E. Carter, H. E. Lopeman, S. P. Krabbe)

3. Drawings

The following drawings were prepared during the month of September.

Drawing	
B-946	Filter Voltage Supplies
B-954	Eccles-Jordan (with reply)
B-955	Eccles-Jordan
B-960	F-Element (a_i^* and s_i^*)
B-961	F-Element (a_i and s_i)
B-962	F-Element (a_{i-1} and s_{i-1})

B-963	Indicator Drivers	
C-967	QRM Logic and Specifications	
C-971	Zero Detect and Carry Generator (A_{2C})	
B-972	Zero Detect and Carry Generator (A_{2C}) Logic	
C-973	Zero Detect and Carry Generator (A_{4C})	
B-974	Zero Detect and Carry Generator (A_{4C}) Logic	
C-975	Zero Detect and Carry Generator (A_{6C})	
C-976	Driver Drivers A_{3C} and A_{5C} (S_{3C} and S_{5C})	
D-977	Driver Drivers $QRM_{3C,6C}$ ($QRM_{2C,5C}$)	
D-980	S Chassis	
C-982	AND-OR Complex Adder	
L-920	Two-Bit Logical Cross Section for M.A.U.	Revised
C-968		Revised
C-969		Revised
C-970		Revised

(H. E. Lopeman, S. P. Krabbe, J. W. Oare)

4. Slow Circuits

Investigation was begun into a set of non-saturating logical circuits. These circuits will be of a topology similar to that of the GF45011 logical elements but will represent a current load on the power supplies of about one-half that of the GF45011 circuits. These circuits will be as fast as possible consistent with the primary requirements that they be as inexpensive as possible and represent about one-half the current load of the fast circuits. Initial attempts at these circuits will be for 10 mc. operation using N-100 and N-101 transistors and T1-G diodes.

(L. J. Peek, Jr.)

5. Auxiliary Storage

Two documents on the magnetic drum were prepared and mailed to various drum manufacturers for bids. They were "Design Objectives for a Magnetic Drum Memory", File No. 331, and "Preliminary Specification for a Magnetic Drum Memory", File No. 332. The "Design Objectives" lists features which are deemed to be essential, i.e. 65,536 words, 3000 rpm or faster, 6 to

10 μsec. word time, etc. The "Preliminary Specification" describes in detail one particular design, i.e. two non-synchronized drums, 3500 rpm, 10 in. dia., 300 bits/in. NRZ, etc. Several manufacturers have indicated that they will respond with proposals and bids.

(H. C. Brearley)

Dropout tests were performed on Ampex C1 computer grade magnetic tape. At 466 bits/in., NRZI, and 150 in/sec., there were on the average two single channel dropouts per pass of 1200 feet of tape. This data was taken over four channels simultaneously. No multiple channel dropouts were observed in 60 passes.

(C. N. Liu)

Early in September a visit was made to the Ampex Corp. and to the Data-Stor Division of Cook Electric Company to discuss new developments in the art of tape transport manufacture.

(R. L. Cummins)

Start and stop times of the Ampex FR300 Magnetic Tape Unit were measured under a number of conditions. These included pinch roller adjustments and replacement of various parts. Under more or less normal conditions, the start times for $\Delta V = \pm 10$ percent ranged from 1.7 to 2.8 ms; for $\Delta V = \pm 20$ percent they ranged from 0.7 to 2.7 ms. For various abnormal conditions, the times were longer. Stop times were about 1.1 ms. For further details, see File No. 344.

(M. D. Freedman)

6. Control Design

The subcontrol mentioned in the June and July reports was built and tested. One of the most important conclusions drawn from this evaluation was that the OR-NOT type of Eccles-Jordan Flipflop was not as desirable a memory element as anticipated. The unit with restored reply has many diodes and stabistors which make it both difficult to wire and slow to operate. As a result an AND-NOT Eccles-Jordan Flipflop was designed by combining two standard AND-NOT circuits. This unit has been built and tested and is so much superior that all future control logic will utilize the AND-NOT realization. The AND-

NOT realization is better due to using only one-half as many diodes, 50% fewer stabistors and 50% fewer resistors. In addition the input voltage is the standard 0.6 volts plus noise margin and the time of operation is less.

(R. E. Swartwout)

7. Sequential Control

This month was devoted to a review of File No. 337, "Arithmetic Control Sequences for the New Computer", by D. B. Gillies and J. O. Penhollow. The sequences were corrected where necessary and slightly modified in some cases. In particular, modifications were introduced to avoid a complete assimilation after each instruction. In the modified scheme the A register may or may not be assimilated between instructions although its assimilated representation always appears at the output of the A adder. If the first five bits of this assimilated representation are 0, the adder output is gated into the S register where a complete zero test is performed.

(John O. Penhollow)

8. Main Arithmetic Unit End Connections

The end connections were partly designed to allow for unassimilated operation in the arithmetic unit.

(R. R. Shively)

PART II

CIRCUIT RESEARCH PROGRAM

(Supported in part by the Office of Naval Research under Contract Nonr-1834(15).)

1. Summary of the September Work

September was a transition period in which much time was spent acquainting new members of the group with the general background information of fast circuit design. T. Kunihiro's tunnel diode work was taken over by K. E. Batcher and R. K. Crow joined H. Guckel in his work on variable feedback gating. The latter system was subjected to its first large scale tests and was found to operate very satisfactorily. C. Afuso continued the work on the two-wire low swing system and added interesting new circuits to the set described in previous reports. J. R. Karge started to investigate the behavior of mesa-type transistors in saturation.

2. Flow-Gating (Now also Called Variable Feedback Gating)

Examination of the send driver led to the following conclusions:

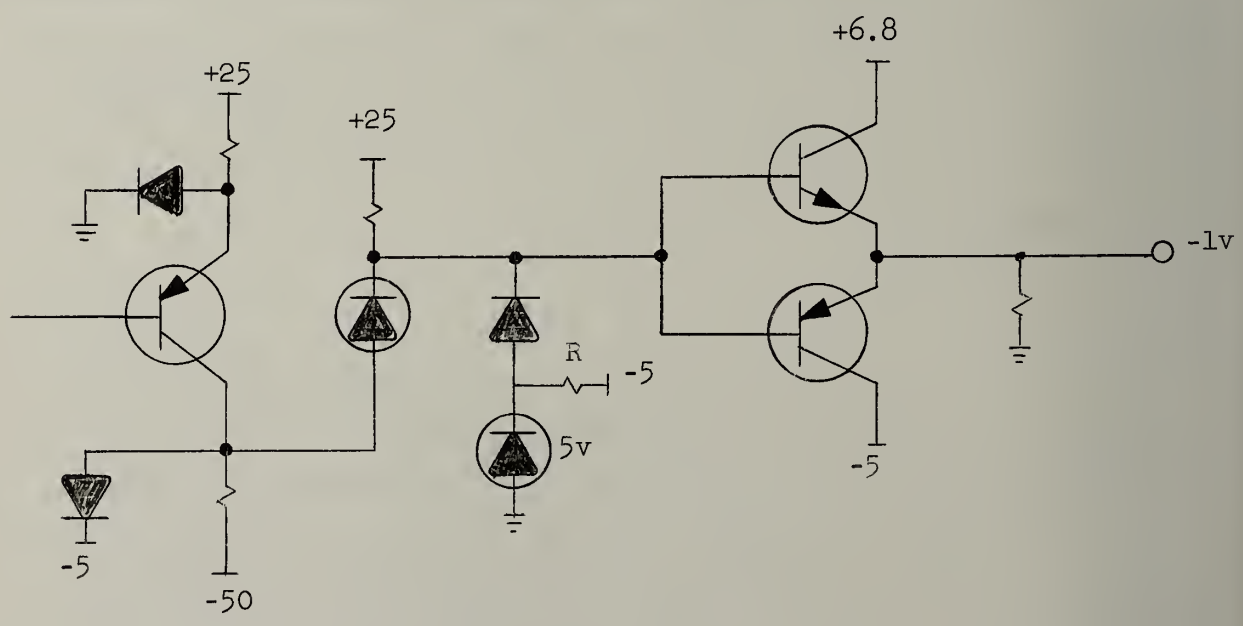

Figure 1

Flow-gating Send Driver

The base of the driver emitter follower should only go negative enough to produce a -1v worst case output. This optimizes the design as far as speed is concerned (swing magnitude and saturation effects on the complementary emitter follower!). Hence, both 5v and R were adjusted correspondingly.

Oscillation Measurements: N-100 - The circuit shown in Figure 2 was used to determine the magnitude of the negative real part of the base input impedance.

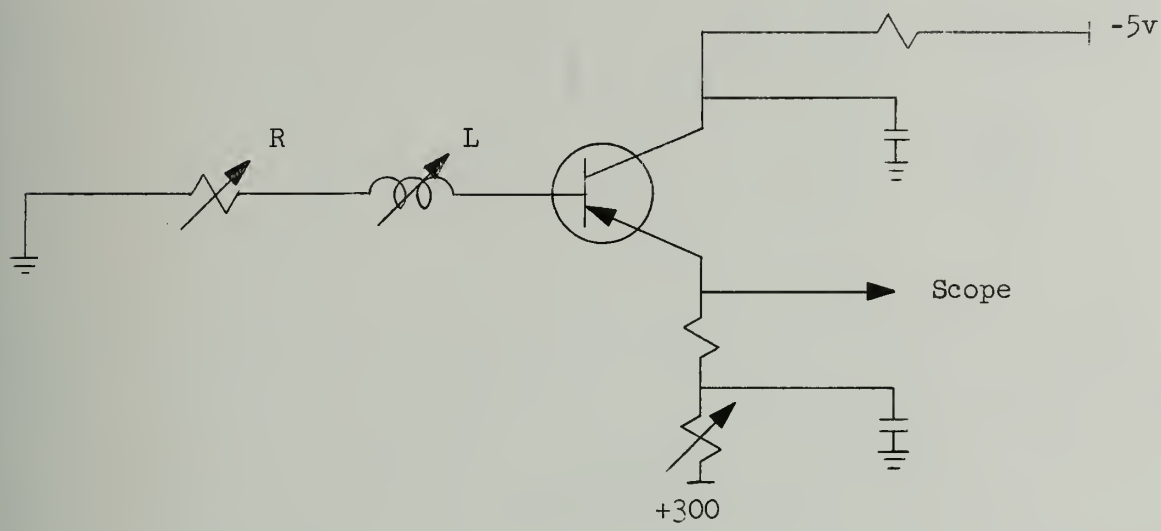

Figure 2

Measurement of Base Input Impedances

The worst case observed value is about -200 Ω, so that emitter followers may be stabilized by series compensation. The details are in the final flow-gating report.

3. Low Swing Difference Amplifier System

The introduction of "prebiassed" bases led to the design of rather interesting simplified topologies for AND and OR circuits.

A two input AND circuit is shown in Figure 3.

Let V_{ba}, $V_{b\bar{a}}$, V_{bb} and $V_{b\bar{b}}$ be the base voltages of T_a, $T_{\bar{a}}$, T_b and $T_{\bar{b}}$ respectively, and set

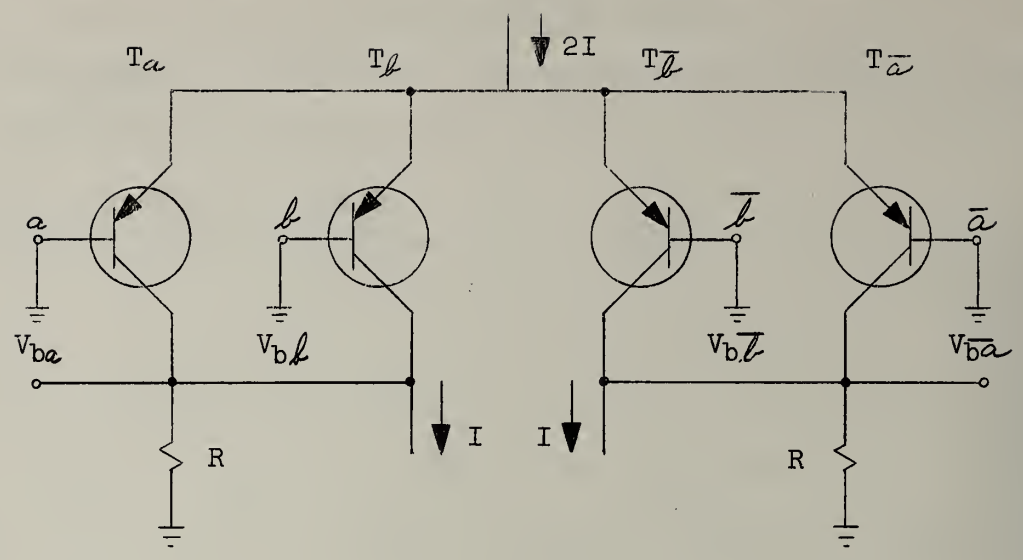

Figure 3

Low Swing AND Circuit

$$\left.\begin{matrix} V_{ba} \\ V_{bb} \end{matrix}\right\} = V_{bo} + u \text{ for a binary input } a, b = 1.$$

$$\left.\begin{matrix} V_{ba} \\ V_{bb} \end{matrix}\right\} = V_{bo} - u \text{ for a binary input } a, b = 0.$$

Also set

$$\left.\begin{matrix} V_{b\bar{a}} \\ V_{b\bar{b}} \end{matrix}\right\} = (V_{bo}+u) - u = V_{bo} \text{ for } \bar{a}, \bar{b} = 0, \text{ i.e., } a, b, = 1.$$

$$\left.\begin{matrix} V_{b\bar{a}} \\ V_{b\bar{b}} \end{matrix}\right\} = (V_{bo}+u) + u = V_{bo} + 2u \text{ for } \bar{a}, \bar{b} = 1, \text{ i.e., } a, b = 0.$$

i.e., make the bias voltages of the transistors corresponding to $\bar{a}$ and $\bar{b}$ higher than those of the transistors corresponding to a and b by an amount u which is large enough to switch the difference amplifier.

Then for the four combinations of a and b, the bias voltages are listed in the table below.

a	b	V_{ba}	V_{bb}	$V_{b\bar{b}}$	$V_{b\bar{a}}$
1	1	$V_{bo}+u$	$V_{bo}+u$	$\underline{V_{bo}}$	$\underline{V_{bo}}$
1	0	$V_{bo}+u$	$\underline{V_{bo}-u}$	$V_{bo}+2u$	V_{bo}
0	1	$\underline{V_{bo}-u}$	$V_{bo}+u$	V_{bo}	$V_{bo}+2u$
0	0	$\underline{V_{bo}-u}$	$\underline{V_{bo}-u}$	$V_{bo}+2u$	$V_{bo}+2u$

Since u is larger than the switching voltage of the difference amplifier, these base voltages determine unequivocally the transistors to which the constant current 2I goes: the transistors whose base voltages are the lowest are ON. In the above table the underlined voltages are the lowest level in each case. Therefore, the output voltages v and $\bar{v}$ are determined. The only case in which v becomes +RI is when a= 1 and b= 1 assuming the α's of the transistors are 1.

Letting +RI represent "1" and -RI represent "0", then v represents $a \cdot b$ and $\bar{v}$ represents $\overline{ab}$.

Similarly a multiple input AND circuit is realized by connecting a pair of transistors for each input in parallel: Figure 4 shows the principle.

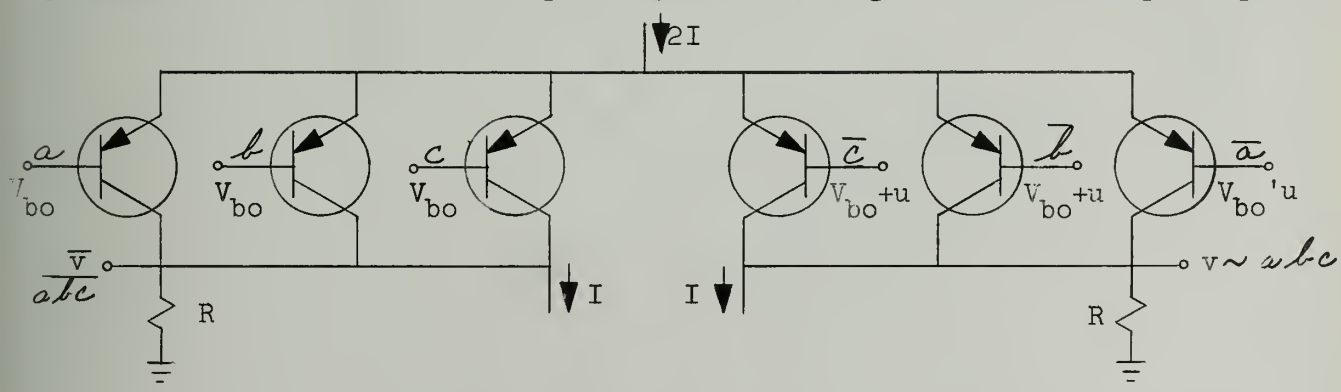

Figure 4
3-Input AND Circuit

Again the only case in which v becomes +RI is when $a = 1$, $b = 1$, $c = 1$.

OR logic is obtained simply by replacing a, b, c, ... by $\bar{a}$, $\bar{b}$, $\bar{c}$, ...

The experimental circuit is shown in Figure 5. The observed time delay of the logic circuit was 4 mμsec.

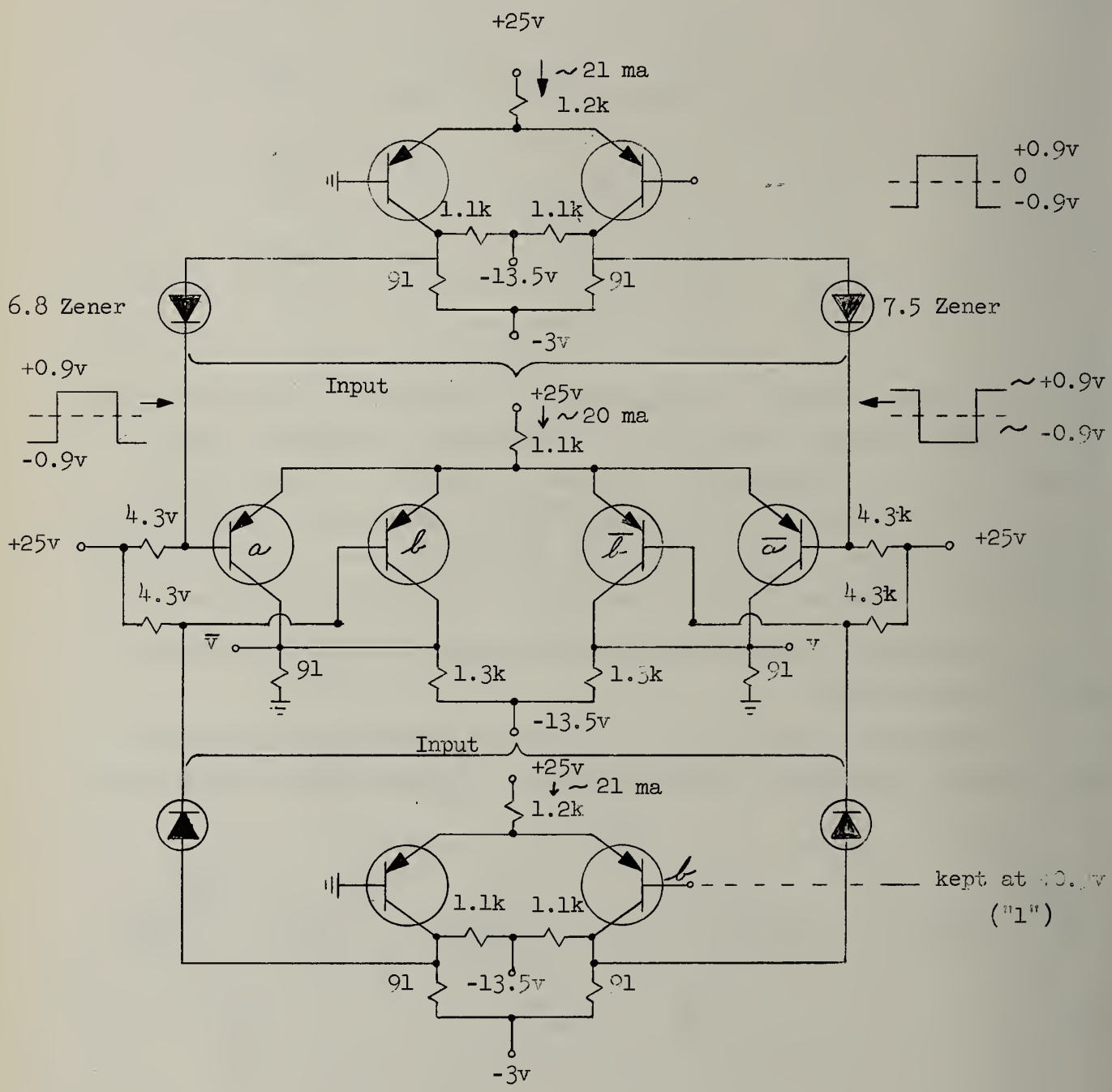

Figure 5

2 Input AND Circuit Test

PART III

DATA REDUCTION METHODS

(Supported in part by the National Science Foundation under Grant G9503.)

Automatic Reduction of Data from Bubble Chamber Photographs

Preliminary studies in the area of pattern recognition have been undertaken. As a concrete and useful example of great current interest, the automatic recognition of high energy particle events in bubble chamber photographs is being studied using simulation procedures on the ILLIAC. Photographs can be scanned on a raster and reduced to a binary representation (0 = white, 1 = black) (on the TX2 computer at Lincoln Laboratory) and placed on paper tape. When read onto the auxiliary drum memory, this digitized picture allows ILLIAC to simulate the existence of a photoelectric, random access, fixed, photographic store.

Using this simulation technique, several routines representing possible steps in the recognition process are being programmed and studied. One set of routines is used to investigate whether at least one point lying on each particle track can be quickly and efficiently found. Starting on such a point a second set of routines follows this track by a fitting and extrapolation procedure which requires an examination of only a small area about the track.

It is hoped that such methods will enable the analysis to be carried out with a data rate much smaller than that which would be implied by a complete scan of the entire picture.

(B. H. McCormick, S. Penny*, J. N. Snyder)

---

* Mr. Penny left the Digital Computer Laboratory in June, 1960 and is now a staff member of the Radiation Laboratory at the University of California, Berkeley, California.

PART IV

ILLIAC USE AND OPERATION

New Illiac Codes

During the month of September, three new routines were added to the Illiac Library.

L 8 - 302 Solution of a System of Linear Equations by an Iterative Method (SADOI only). This is a complete program version of the open subroutine for the solution of linear equations by an iterative method, L 9 - 303. The complete program version provides input, output, and manipulative routines so that the user need supply only a data tape containing the coefficients of the linear equations to be solved.

(G. Golub and
W. Rosenkrantz)

KSL 1.97 - 305 Maxplane (An Oblique Factor Rotation Program). This routine applies certain criteria and carries out a rotation of factors to oblique simple structure. It is thus an attempt to carry out automatically a process which has frequently been done by trial and error, using the subjective criteria of human observation of the results of a given rotation. A complete description of the methods employed is found in an article by R. B. Cattell and J. L. Muerle entitled "The Maxplane Program for Factor Rotation to Oblique Simple Structure", Educational and Psychological Measurement, July, 1960.

(J. L. Muerle and
N. E. Wiseman)

K 17 - 309 Product Moment Correlations, Variance-Covariances, Means, and Standard Deviations (SADOI only). This routine is a modification of K 8. It differs from K 8 in that a problem can be completed in two or more distinct machine runs.

A problem may be interrupted before completion by the user, by the machine operator, or automatically when an incorrect number of variables in a row of the data tape is read. Hence, a problem of undue length can be carried out in several runs of reasonable length or the portion of the problem which has been completed prior to the occurrence of an error can possibly be salvaged.

(Freda Fischer and
Kern Dickman)

Illiac Usage

During the month of September, specifications were presented for ten new problems. This list does not indicate how the Illiac was used, because large amounts of machine time may have been consumed by problems with numbers less than 1774. Numbers followed by T are for theses.

1774 Civil Engineering. General Characteristics of Subgrade and Surface Soils. This study is concerned with the correlationship between different properties of surface materials used in highway construction. The variables considered include the composition index, in-place density and field California Bearing Capacity. It is desired to determine the multiple regression equations, the correlation coefficients, etc. Library routine K14 is suitable for such computation.

1775T Health Service. Analysis of Water Consumption in Single Dwelling Units. The object of this research program is to determine, by means of inter-correlations, which of the 45 factors involved are most directly related to water consumption.

From a study of the above correlations, from 8 - 12 factors can hopefully be selected and used in a multiple regression analysis.

1776 Education. Number of Factors. Some unsystematic investigations suggest that the ideal number of factors to retain in factor analysis is given by the number of eigenvalues greater than one of the observed positive definite correlation matrix. It is proposed empirically to extend this investigation more systematically through the use of Illiac.

1777T Agricultural Economics. A Comparison of Private and Cooperative Farming in India. To investigate the effect of consolidation of small independently owned private farms into a cooperative unit, a linear programming analysis will be performed. First, an optimum solution for each of eight individual units will be found. Then, a solution for a consolidated cooperative unit will be obtained. The solutions will require only standard library routines.

1778 Psychology. Reanalysis of Classification Batteries: The Sept. '44 Battery. During World War II, a 21 variable classification battery was given to 8,158 unclassified aviation students. This set of data was factor analyzed on desk calculators by the centroid method. Because of the large sample size and small number of variables, this makes an interesting model for study of rotational procedures.

This data will be used by Illiac to extract principal component factors and to rotate the factors by the Oblimax and Varimax techniques.

1779 Mining and Metallurgical Engineering. Flow Through Porous Media. Some cases of fluid flow through porous media are analogous of the flow of electricity through networks. The required physical quantity, the permeability of the medium, is the equivalent of the overall electrical conductivity. A high speed computer can be efficiently applied to solving the analogous problem because of the statistical requirement of a large number of components and modes to yield a reliable result. The method used will be "relaxation" of the flow equation at each mode.

1780 Digital Computer Laboratory. Factor Score Study. In theory, a matrix of factor scores, P, is defined by the equation, $M = FP$, where M is the measurement matrix in standard score form and F is a matrix of factor loadings. To solve for P in a direct manner, $P = F^{-1}M$, in practice is nearly always impossible for any or several of the following reasons:

(1) At least in a statistical sense, F has rank less than its order;

(2) F is often of a large dimension (100 or more) and to invert F by a linear equation solver would involve many steps;

(3) F is usually incomplete (i. e., rectangular);

(4) F is usually obtained using communalities, and when this is true, the factor space and the test space do not coincide; then P has to be estimated (often in the least squares sense);

(5) F may be non-orthogonal which further complicates alternative procedures.

There are a number of ways to obtain estimates of P, some of them developed prior to the widespread use of computers, which vary from crude weighting procedures to more exact and defensible procedures. The Illiac will be used to set up a small model problem and to calculate or estimate factor scores under a variety of conditions--orthogonal and oblique F, with and without communalities, with principal axis and centroid F's, with complete and incomplete F's--and to compare these sets of factor scores. The results will be used to illustrate the more defensible procedures and to point the way for research workers who have need of factor scores.

1781 State Water Survey. Reservoir Capacity. The study involves the analysis of approximately 50 years of stream flow records at 100 stations in Illinois to determine an estimate of reservoir capacity necessary to meet certain water requirements during a certain recurrence interval drought.

(a) Stream flow measurements will be used in:
Calculation of moving averages for periods of 1 month to 60 months;

(b) A complex sorting on each generated series of running totals to determine an estimate of the low flow frequency distributions; and

(c) Computations to determine reservoir capacity based on the various low flow series.

1782T Sociology. Social Factors in Traffic. The variables associated with traffic generation in Champaign-Urbana are to be studied. About twenty-five measures are to be correlated with the number of traffic trips made from forty zones in the two towns. Since it is not known what variables are linked to traffic other than the number of automobiles owned per zone, it appears best to make a factor analysis to determine if traffic generation is linked to any configuration of the variables describing the social aspects of the community zones.

The factor analysis would be by centroid rotation with fixed communalities. The Varimax program would be used to determine the simple structure. An orthogonal solution appears desirable since there is no hypothesis as to the expected loadings relative to traffic generation other than the evidence of car ownership.

The aim of the research is to discover underlying factors which account for traffic generation in cities of the size and nature of Champaign-Urbana. The assumption of the study is that characteristics of households--size, socio-economic status, place of residence, age of members, etc.--are associated with the generation of automobile and other travel in the community.

1783T Health Service. Analysis of Water Consumption in Single Dwelling Units. Through multiple correlation, this program will determine what proportion of the 45 factors involved in the data under study are intercorrelated, and what the relative weights of the various factors are in producing the found relationship.

The program will then determine the degree of multiple linear regression by analyzing further the factors indicating relationship with the average annual water consumption per household and per person, the high monthly reading water consumption per household and per person, and the low monthly reading water consumption per household and per person, etc.

Table I shows the distribution of Illiac machine time for the month of September.

TABLE I

	Hrs:Min
Scheduled Maintenance	63:40
Unscheduled Maintenance	26:25
Drum Engineering	6:39
RAR	2:04
Leapfrog	13:31
Wasted	1:42
Library Development	3:55
Demonstrations	3:37
	121:33

Use by Departments

Agricultural Economics	14:12	
Agronomy	1:40	
Animal Science	2:08	
Bureau of Educational Research (PH-M1839)	:13	
Bureau of Educational Research	6:04	
Chemistry (NSFG-5907)	:34	
Chemistry (NONR 1834(13))	1:48	
Chemistry (NSFG-7336)	39:32	
Chemistry	33:11	
Coordinated Science Lab. (DA-36-039-SC56695)	52:31	
Dairy Science	:29	
Digital Computer Laboratory (NSFG-9503)	23:43	
Digital Computer Laboratory (AEC-AT(11-1)415)	6:47	
Digital Computer Laboratory	1:01	
Economics (NSFG-7056)	1:34	
Economics	:39	
Education	3:21	
Electrical Engineering (NSG 24-59)	6:07	
Electrical Engineering (Iowa Grant #1955)	:19	
Electrical Engineering (NONR 1834(02))	11:20	
Electrical Engineering	31:36	
Food Technology	2:51	
Institute of Communications Research (44-28-20-378)	5:25	
Institute of Communications Research (USPHM3941)	:16	
Inst. for Res. on Exceptional Chil. (USPHSNIHM-3207)	7:19	
Inst. for Res. on Excep. Children (HEW SAE 8204)	7:05	
Institute for Research on Exceptional Children	:48	
Mathematics	11:40	
Mechanical Engineering	32:19	
Medicine	2:26	
Mining and Metallurgical Eng. (TRUS AF6770)	:11	
Physics (DA11-022-OR1001)	:18	
Physics (NONR 1834(05))	6:49	
Physics (AF 49(638)661)	:05	
Physics	6:12	
Psychology (AF49(638)371)	6:52	
Psychology (PH1715)	2:03	
Psychology (AF41(657)279)	4:29	
Psychology	30:33	
Sociology	17:44	
State Water Survey	1:43	
Structural Research (IHR-46)	:15	
Structural Research	18:35	
Theoretical and Applied Mechanics (ORD593)	1:47	
Veterinary Medicine (NIHE-3077)	1:06	
Zoology	:06	
		407:46
		529:19

Error Frequency and Analysis

The machine is normally used for "engineering" and maintenance between 7:00 a.m. and 10:30 a.m. Since the periods between 7:00 a.m. and 10:30 a.m., together with certain irregular periods, such as Saturdays and Sundays, are devoted to a heterogeneous group of engineering, maintenance and laboratory functions, it is more instructive, from an error standpoint, to look at the periods between 10:30 a.m. and 7:00 a.m. of the next day in order to make an observation of the error frequency in the machine. This is the actual period when the machine is designated for use, although certain engineering procedures frequently require the scheduling of extra maintenance time. With this in mind, a summary table has been prepared using the period between 10:30 a.m. and 7:00 a.m. of the next day. This table lists the running time when the machine was operating, the amount of time devoted to routine engineering, the amount of time devoted to repairs because of breakdowns, and a number of failures while the machine was listed as running. Each failure was considered to have terminated a running period and was followed by a repair period in preparing this table. Since the leapfrog code is our most significant machine test, the length of time which it has been used on the machine is listed separately, together with the number of errors associated with that particular code. This information for the month is presented in Table II.

It is important to notice that, except during scheduled engineering periods, any interruption of machine time that was not planned is considered a failure in this table. In rare cases, where the failure is not known until a later time, it is possible that no repair period is associated with the failure. This over-all system has been adopted because it makes it possible for a machine user to estimate directly the probability that the machine will be "running" any instant of time and the probability of a failure during any given interval of running time.

TABLE III

Memory	13
Control	1
Arithmetic	1
Drum	3
Reader	1
Punch	8
Scope	1
Power Supply Failure	1
Total	39

TABLE II

DATE	RUNNING OK TIME	REPAIR TIME	SCHEDULED ENGINEERING	INTERRUPTIONS OR FAILURES STOPPING OK TIME	TYPES OF INTERRUPTIONS OR FAILURES CAUSING REPAIR TIME	WASTED	LEAPFROG	FAILURES STOPPING LEAPFROG
9/1/60	17:55	2:44	3:21	3	(1) Memory failure 2^{-20} and 2^{-19}. (2) Bad tubes in adder. (3) Punch #1 failed.	:00	1:08	2
9/2/60	20:42	:18	3:00	2	(1) Memory failure 2^{-19} and 2^{-21}. (2) Power supply failure.	:00	:15	1
9/6/60	18:38	1:22	4:00	2	(1) Control error. (2) Punch #1 failed.	:00	1:08	0
9/7/60	19:58	:01	4:01	1	(1) Punch #3 failed.	:00	:28	0
9/8/60	21:03	:00	2:57	0		:00	:00	0
9/9/60	21:35	:10	2:15	1	(1) Punch #3 failed.	:00	:00	0
9/12/60	19:40	1:06	3:14	1	(1) Scope failure.	:00	:00	0
9/13/60	21:05	:00	2:55	0		:00	:35	0
9/14/60	20:43	:00	3:17	0		:00	:25	0
9/15/60	20:23	:14	3:23	1	(1) Punch #3 failed.	:00	:25	0
9/16/60	20:36	:00	3:24	0		:00	:51	0
9/19/60	20:42	:15	3:03	2	(1) Punch #3 failed. (2) Reader J failed.	:00	:31	0
9/20/60	19:30	1:00	3:30	3	(1) Memory failure. (2) Drum failure. (3) Drum failure.	:00	:20	0
9/21/60	20:18	:00	3:32	0		:00	:00	0

TABLE II (Continued)

DATE	RUNNING OK TIME	REPAIR TIME	SCHEDULED ENGINEERING	INTERRUPTIONS OR FAILURES STOPPING OK TIME	TYPES OF INTERRUPTIONS OR FAILURES CAUSING REPAIR TIME	WASTED	LEAPFROG	FAILURES STOPPING LEAPFROG
9/22/60	16:27	5:22	2:11	3	(1) Memory failure 2^{-22} and 2^{-26}. (2) Punch #3 failed. (3) Memory failure 2^{-24}.		:30	1
9/23/60	20:41	:49	2:30	3	(1) Memory 2^{-24}, 2^{-31}. (2) Memory 2^{-24}. (3) Drum failure.	:00	:20	0
9/26/60	19:01	2:19	2:40	4	(1) Punch #3 failed. (2) Memory failure 2^{-24} and 2^{-26}. (3) Memory failure 2^{-24}. (4) Memory failure 2^{-24}.	:00	:22	0
9/27/60	21:26	:00	2:34	0		:00	:27	0
9/28/60	20:57	1:39	1:24	2	(1) Memory 2^{-26}. (2) Memory 2^{-24} and 2^{-26}.		:20	2
9/29/60	22:05	:00	1:55	0		:00	:20	0
9/30/60	20:40	:43	2:37	1	(1) Memory 2^{-22}.	:00	1:18	0
TOTALS	424:15	18:02	61:43	29		:00	10:08	6

PART V

IBM 650 USE AND OPERATION

New 650 Codes

During the month of September, one new routine was added to the Digital Computer Laboratory 650 Library.

K6' - 67' Statistical Analysis Library, Tape. SALT, the Statistical Analysis Library, Tape, is a library of compatible programs dealing with the different phases of the solution of problems in statistics, these programs being brought together under the control of a set of control routines which handle all use and modification of routines in SALT. It is designed to be able to solve problems encountered in statistical analysis, especially those encountered most frequently, in a straight-forward and simple manner.

The following five characteristics were considered to be most important in the design of SALT:

1. It should be as fast and efficient as possible.
2. It should be easy to use and yet yield itself to sophistication on the part of the user.
3. It should be capable of expansion and modification.
4. It should be able to handle large scale problems.
5. It should be as free from human control as possible, so that after the initial start, SALT would complete the problem without further intervention on the part of the user unless desired.

These criteria are listed in approximately relative importance.

The mode of operation used by SALT in solving a problem on the IBM 650 characterizes the methods used to achieve these five criteria. Nearly all SALT routines are stored on a magnetic tape. A one-card bootstrap routine reads the SALT control routine for problem solving from the magnetic tape into the drum storage. This control routine

then reads a deck of cards which contain the title of the problem to be solved and a set of coded operations to be performed by SALT. The title is stored for future print-outs, and the coded instructions are interpreted by the control routine to form a list of interpretative control words, these control words corresponding to a list of the calculations to be done.

Using the first control word, the control routine then finds and reads a routine from the library tape. This routine performs some operation such as input of data and storing it on a magnetic tape. When it is finished, the control routine then locates and reads another routine from the library tape, using the second control word. The calculations are sequentially performed in this manner until all of the coded instructions given by the user have been done. The machine then stops.

During all of the calculations, the intermediate results are stored on a magnetic tape. In this way, there is a great deal of storage available, and there is no extra time consumed in punching and reading cards when it is not necessary. Output only occurs when the user wants information from the machine.

(Samuel J. Penny)

IBM 650 Usage

During the month of September, specifications were presented for 12 new problems. This list does not indicate how the IBM 650 was used because large amounts of machine time may have been consumed by problems with numbers less than 163'T. Numbers followed by T are for theses.

163'T Psychology. Value Conflict. This is an exploratory study trying to discover if any significant relation exists between a value conflict score, broken into 19 components, and a measure of personality conflict or anxiety, as measured by the Taylor Manifest Anxiety Scale. Correlations are sought between 20 variables: the 19 components signifying value conflict and the Taylor Scale Score. N = 50.

164' Agronomy. Soil Moisture Flow. The solution of the following equation for non-steady state flow is desired:

$$\frac{\partial \Theta}{\partial t} = \frac{\partial}{\partial x}\left(K_{\Theta} \frac{\partial H}{\partial x}\right)$$

t = time, x = distance
H = hydraulic head
H = sum of tension (T) and gravity (G) heads

Since the conductivity, K_{Θ}, is a function of the moisture content, Θ, the solution by classical methods is very difficult. Consequently, a numerical solution is proposed. The solution is:

$$\frac{\Delta \Theta_{j+1,\, i}}{\Delta t} = \left(\frac{\left[T_{i-\Delta x,\, j} - T_{i,\, j} + G\right]}{\Delta x} K_{i,\, j} - \frac{\left[T_{i,\, j} - T_{i+\Delta x,\, j} + G\right]}{\Delta x} K_{i+\Delta x,\, j}\right)$$

G is a constant for equally spaced distance increments and is 1 if Δx is 1. $\Delta t = t_{j+1} - t_j$, where j is a time subscript and must be smaller than a certain amount for the solution to be approximately correct. For this proposal Δt is constant and is predetermined. i = distance subscript. The solution for i = 1 to i = n is sought. $K_{i,\, j}$ is dependent on the moisture content at x = i and i + Δx. The value is determined from tables supplied and the initial boundary conditions.

By changing the boundary conditions, the solution of various infiltration and evaporation problems of practical importance is possible.

165' Agricultural Extension. Agricultural Extension Keeping Fit Study. Two new programs are under development which will replace those used on problems described by problem specification numbers 29' and 30'. The new programs will contain the same computations as the previous programs, as well as the addition of computing a pulse recovery score and a number of ratios among the various standard scores. A new method for computing standard scores will be used.

166'T Agricultural Economics. Economics of Growing Canning Crops. This problem involves a correlation of three variables, pea, corn and pumpkin yields, with a number of variables related to the method of production, including cost, treatment of soil, percent of land held out of direct production, etc. The data was collected from 70 individual farmers in the Norton and Gibson City

areas of Illinois who are typically cash grain farmers. A total of 23 variables will be analyzed by means of Product Moment Correlations, Means, and Standard Deviations.

167' Physics. Diode Response. The problem is to find the current and voltage of a crystal diode in a slightly inductive circuit as a function of time when the supply voltage is switched from forward to reverse.

Mathematically, the equation to be solved is

$$\frac{dI}{dt} = F\ (I,\ t)$$

where F(I, t) involves a numerical integration, including the "history" of the diode current, I.

168'T Education. School Achievement. The data for this analysis was collected from 240 elementary pupils enrolled in the Champaign and Urbana school systems. Six product moment correlation matrices and means and variances are needed for the purpose of comparing the items in the test; comparing Champaign schools with Urbana schools; and for comparing male and female students.

Sixteen observations were made on each student which include: I. Q., age, achievement scores in arithmetic, reading, spelling, all subjects (grade point averages), and related measures.

169' Business Office. Accounts Receivable. The 650 Computer will be used for updating a student account file on magnetic tape and computing penalty amounts for all delinquent accounts. Output from the machine will be a statement of account and a punched card to be returned with the payment on the student's account.

The program will include all student charges.

170'T Mechanical Engineering. Two Phase Nozzle Calculations. It is desired to calculate nozzle forms for two phase flow systems. The two phase flow being considered consists of solid particles (glass beads) and gas (air). The analytical problem has been solved. The resulting equations involve seven parameters. Hand calculation for one set of parameters is laborious. Since many forms involving different parameters must be calculated, it would be desirable to use the 650 for this purpose.

171' Business Office. Accounts Receivable. The 650 Computer will be used for updating a student account file on magnetic tape and computing penalty amounts for all delinquent accounts. Output from the machine will be a statement of account and a punched card to be returned with the payment on the student's account. This is the production version of problem 169'.

The program will handle all student charges.

172' Elementary Education Division. Foreign Language Instruction Project. Product moment correlations, means, and variances are needed to determine the effect of an instructional method on two groups of subjects; an experimental group o sample size 48; and a control group of sample size 50, and to determine whether or not IQ, GPA and other achievement and personality variables can be used to predict learning ability as it relates to languages.

173' Civil Engineering. Transformation of Coordinates. The aim of this program is to obtain an easy and fast way to transfer the coordinates of the points from the stereoplotter coordinate system to the local land coordinate system. The program after being completed will read a deck of cards containing the machine and land coordinates of the control points and calculate the constants of transformation.

Then it will read a deck of cards containing the machine coordinates of a set of points and calculate the corresponding land coordinates for these points and the mean square error in the determination of these points.

174' Home Economics. Analysis of Family Economics. Five studies were made by the Home Economics Department during previous years, 1956-1958, concerning child development, family housing, clothing, family economics and food. Data for these studies were collected from families resident in Illinois. Previous analyses were of a descriptive nature, using averages, frequency distributions and percentages.

Further analysis is desirable at this time to study the testing technique and composition of the questionnaires. Many of the items are non-quantative. The computer will be used to compute Chi-Squares in order to establish the degree of dependency of the various items. The frequency tables for this analysis have been computed.

Table I' shows the distribution of the IBM 650 machine time for the month of September.

TABLE I'

		Hrs:Min	
Regular Maintenance		15:34	
Unscheduled Maintenance		4:37	
Library Development - DCL		2:41	
Log Summation		:43	
Classes			
CE 391 (Demonstration)	1:10		
Demonstration		1:01	
Wasted		26:37	
			52:23

Use by Departments

Agricultural Economics		3:25	
Animal Science		1:52	
Chemistry		1:54	
Civil Engineering		12:35	
Digital Computer Laboratory		:23	
Graduate College		4:28	
Mechanical Engineering		:32	
Mining and Metallurgical Engineering		7:45	
Physics		1:36	
State Water Survey		5:36	
Statistical Service Unit		99:18	
Admissions and Records	:47		
Agricultural Economics	1:03		
Agricultural Extension	:17		
Bur. of Educational Research	5:34		
Bur. of Institutional Research	15:06		
Bursar's Office	6:00		
Business Office	11:13		
Dairy Science	5:46		
DHIA	34:14		
Education	4:06		
Forestry	:05		
Horticulture	:13		
Music	8:03		
Political Science	:39		
Psychology	6:02		
Student Counseling Service	:10		
			139:24
			191:47

Error Frequency and Analysis

The IBM 650 is normally on from 8:00 a.m. to 5:00 p.m. The machine is used for preventive maintenance from 8:00 a.m. to 12:00 noon on Mondays.

Table II' gives the daily breakdown of machine time with respect to wastage and unscheduled maintenance.

Table III' presents a summary of errors for July.

TABLE III'

Storage unit errors		15
653		1
Fuse blew	1	
650		4
Blank bits or double bits in program register	3	
Blank bits in distributor	1	
533		4
Read blank bits	1	
Read alpha incorrectly	1	
Card jam on read side	1	
Stop key on punch side causing read side to malfunction	1	
407		3
Prints alpha incorrectly	1	
Continued to cycle when stop key pressed	1	
Print wheel not printing	1	
Tape, tape unit or tape control		3
Read errors on tape	2	
Engineer error	1	
Total		30

TABLE II'

DATE	RUNNING OK TIME	SCHEDULED ENGINEERING	REPAIR TIME	WASTED	FAILURES STOPPING OK TIME	AIR CONDI-TIONING	TYPES OF FAILURES CAUSING REPAIR TIME
9/1/60	8:34			:26	7		(1)(2)(3)(4)(5)(6)(7) Storage unit light when no error had occured.
9/2/60	8:35			:25	0		
9/6/60	4:51	3:55		:14	1		(1) Storage unit light when no error had occurred.
9/7/60	8:52			:18	2		(1) Read a blank when no error. (2) Storage unit light when no error had occurred.
9/8/60	8:45			:25	5		(1)(2)(3)(4)(5) Storage unit light when no error had occurred.
9/9/60	7:27			1:38	0		
9/12/60	3:08	3:50		2:02	0		
9/13/60	6:20		1:02	1:45	3		(1) 407 on line not printing alpha correctly. (2) Tape on unit read incorrectly. (3) Constant vertical and horizontal tape errors, but computer didn't stop. Area on tape had to be bypassed.
9/14/60	5:18		:14	3:29	1		(1) Word six of alpha reads incorrectly.
9/15/60	6:49		1:05	1:09	2		(1) Blank bit in program register. (2) 407 cycling when stop key pressed both off line and on line. Burnt point found on relay.
9/18/60	7:03			2:05	0		
9/19/60	1:42	3:52		3:26	0		

TABLE II' (Continued)

DATE	RUNNING OK TIME	SCHEDULED ENGINEERING	REPAIR TIME	WASTED	FAILURES STOPPING OK TIME	AIR CONDI-TIONING	TYPES OF FAILURES CAUSING REPAIR TIME
9/20/60	7:01			2:04	1		(1) Binary bit lost in position 1 of the distributor.
9/21/60	4:35		1:33	3:00	2		(1) Fuse blew in 653. (2) Print wheel 88 on 407 not printing.
9/22/60	8:30			:30	0		
9/23/60	8:38		:28	:05	2		(1) 533 punch stop key prevented the read start from going ahead. (2) Card jam in 533.
9/26/60	4:53	3:57		:10	0		
9/27/60	7:54		:15	:52	2		(1) Tape indicate light came on by mistake. (2) Storage unit light came on.
9/28/60	7:25			1:35	0		
9/29/60	10:02			:26	1		(1) Binary bit lost in position 6 of program register.
9/30/60	8:37			:33	1		(1) Double bits in position 2 of program register.
TOTALS	144:59	15:34	4:37	26:37	30		

PART VI

GENERAL LABORATORY INFORMATION

Seminar

"Sequence Generators and Digital Computers", by Professor Arthur W. Burks, Visiting Research Professor of Applied Mathematics, Philosophy Department, University of Michigan, September 26, 1960.

Personnel

The number of people associated with the Laboratory in various capacities is given in the following table:

	Full-Time	Part-Time	Full-time Equivalent
Faculty	10	1	10.75
Visiting Faculty	2	-	2.00
Research Associates	1	-	1.00
Graduate Research Assistants	8	28	11.63*
Graduate Teaching Assistants	-	5	1.25*
Administrative and Clerical	5	-	5.00
Other Nonacademic Employees	31	4	32.67
TOTALS	57	38	64.30

* Average Figure - Most assistantships begin on September 16.

The Laboratory Advisory Committee consists of Professors H. C. Brearley, L. D. Fosdick, D. B. Gillies, G. A. Metze, B. H. McCormick, D. E. Muller, T. A. Murrell, W. J. Poppelbaum, J. E. Robertson and J. N. Snyder.

Ilct

UNIVERSITY OF ILLINOIS

GRADUATE COLLEGE

DIGITAL COMPUTER LABORATORY

TECHNICAL PROGRESS REPORT

PART I - HIGH-SPEED COMPUTER PROGRAM

PART II - CIRCUIT RESEARCH PROGRAM

PART III - SWITCHING CIRCUIT THEORY

PART IV - DATA REDUCTION METHODS

PART V - ILLIAC USE AND OPERATION

PART VI - IBM 650 USE AND OPERATION

PART VII - GENERAL LABORATORY INFORMATION

October, 1960

PART I

HIGH-SPEED COMPUTER PROGRAM

This work is supported in part by Contract No. AT(11-1)415 of the Atomic Energy Commission and in part by the University of Illinois. Contract No. AT(11-1)415 is supported jointly by the Atomic Energy Commission and the Office of Naval Research.

1. Checkout and Testing

Procedures have been formulated to ensure a thorough check of each chassis. This check will be done in three phases:

a) Wiring check,

b) Voltage check without transistors,

c) Static performance check with transistors.

Dynamic tests will be performed in sections involving several chassis, e.g. one A, one S, and one QRM chassis having two quaternary digits each. The logic for a speed-independent test control which permits testing of such a section at various speeds (determined largely by the point from which return signals are derived) has been designed but proved very expensive. A second and cheaper version is being completed. This version will include facilities to change the test sequence as well as the length thereof. It is hoped that the control may be speeded up until the section under test fails. A non-speed-independent control, which potentially could run at much higher speeds was considered impractical based on the unreliable performance of the clock control for Test Unit II.

(M. Melman, G. Metze, R. E. Swartwout)

2. Examination of the Merits of Advance Control and Multiple Access to Flow-Gating Storage

The activity of the flow-gating store and the merits of parallel operation offered by advanced control compared with strict serial operation have been studied. For this study attention has been focused on the execution of the inner loop of some common, simple programs. These programs include evaluation of a scalar product; evaluation of a square root by Newton's method; evaluation of a continued fraction; evaluation of a polynomial; solution of a set of simultaneous linear equations using the Gauss elimination method for triangularizing the matrix. Some of the important operation times that were assumed are: add 2 μsec; multiply 4 μsec;

divide 6 μsec; flow-gating access 0.2 μsec; average core access 1 μsec; add in the address arithmetic unit 0.5 μsec.

The following observations result from this study:

a) The ratio of the inner loops execution time to that in a similar machine without advanced control is not less than about 0.65.

b) The time taken by the operations of delayed control which are necessarily executed serially is so large that no matter how the flow-gating store is broken into independently accessed parts the ratio quoted in a) will not be significantly affected.

In most of the cases considered the ratio cited in a) fell within 10% of 0.7. In an extreme case, represented by the square root program, the ratio was 0.94. It should be pointed out that the assumptions made in this study tend to bias the above ratio toward small values. For example, in considering the action of the machine with delayed control it was assumed that everything "meshed" perfectly; that is, for a set of parallel operations the total execution time for the set was taken to be the greatest of the individual times. In considering the strictly serial case it was assumed that B-line arithmetic was not paralleled with anything else.

(L. D. Fosdick, J. A. Resh)

3. Slow Circuits

A racing NOT test unit was built and tested. This unit consisted of five NOT elements in a loop. It was found, using N-100 transistors and T1-G diodes throughout, that each NOT element has a delay (zero crossing at the input to zero crossing at the output) of about 40 mμsec. and an output rise of about 40 mμsec.

A bleeder was designed and tested for the purpose of driving a complementary pair emitter follower. It is envisioned that the complementary pair can be used to drive diode logic or other loads requiring large over-currents in both directions.

(L. J. Peek, Jr.)

4. Auxiliary Storage

Negotiations for the purchase of a 65,536 word magnetic drum continue. So far, we have received three full-fledged proposals, two letters of detailed comments about the "Preliminary Specification for a Magnetic Drum Memory", File No. 332, and several promises of proposals.

Even though the drum format will not be definitely known until a manufacturer is selected, it was decided to begin a preliminary system design. For this purpose, the following parameters were assumed:

Total capacity will be 65,536 words, divided between two drums. The drums will not be phase-locked. Each drum will be divided into 16 bands of 14 tracks each. Each 52-bit word will be recorded in four successive 14-bit characters (13 bits plus parity). At 3500 rpm, the character period will be 1.82 μsec. and the word period will be 7.28 μsec. There will be eight 256 word blocks in each band. The gaps between adjacent blocks will be about 270 μsec. to allow for track switching. Figure 1 shows the arrangement of the 128 blocks on one drum.

(H. C. Brearley)

Serial parallel conversion and buffering will be needed between the core memory and all auxiliary storage and input-output devices, since as presently contemplated, each of these devices will handle only partial words. On the basis of 4 characters per word, the optimum buffer capacity seems to be between 1 1/4 and 1 3/4 words (between 5 and 7 characters). A general expression for the maximum safe time between requesting a core memory access and granting the request is

$$t = (n - K + 1)\,\tau - g_1 - g_2$$

where n is the buffer capacity in characters, K is the word length in characters, τ is the character period of the device, g_1 is the gating time from the device into the buffer and g_2 is the gating time from the buffer into the core memory. This system does not require phase adjustment of the gate pulses.

On the basis of the preceding paragraph, and on the basis of the magnetic drum assumptions discussed earlier, a scheme was developed for the

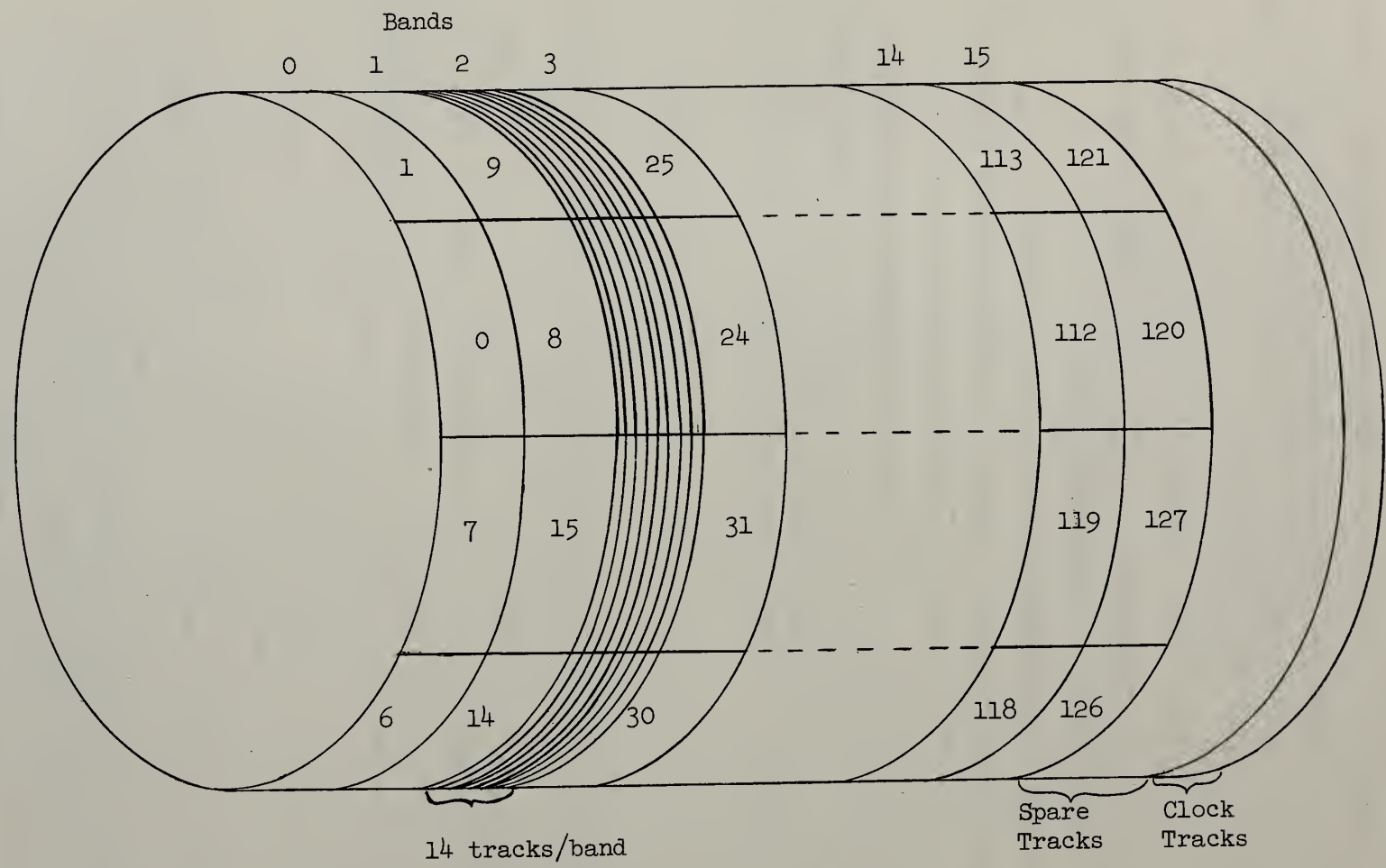

Figure 1

Magnetic Drum Layout

exchange of information and control signals between the drum and the core memory. A flow chart and a control pulse sequence diagram were also prepared. This work was done on the basis of a 1-3/4 word transistor buffer. It was realized that 1-1/4 words of buffering will probably be sufficient. The same general scheme will still be applicable.

(P. V. S. Rao)

It has been decided to order two magnetic tape transports in addition to our presently owned Ampex FR300. A "Request for Proposal on Magnetic Tape Transports", File No. 345, was written, describing in considerable detail the points to be covered in the proposals. Copies of this, with covering letters, were mailed to about ten manufacturers.

In preparation for making a detailed block diagram of the magnetic tape system, a study of the relative advantages of various tape codes (NRZ, NRZI, Phase Modulation) in terms of cost and data rates was begun.

File No. 343, "AND's, OR's, and AND-OR Complexes", based on a series of lectures by Professor G. Metze, was completed.

(R. L. Cummins)

Dropout tests on Ampex C1 magnetic tape were continued. Approximately 850 passes could be obtained on a piece of tape before any permanent dropouts were observed. For further details, see "Dropout Data on FR300 Tape Unit", File No. 349.

(C. N. Liu)

The differential time delays through various channels of the Ampex FR300 Magnetic Tape Unit were investigated, particularly those due to head gap scatter. According to Ampex's optical data, the differential delays through our write and read heads should be less than 0.7 and 0.4 μsec. respectively. So far, it has not been possible to verify these figures by time delay measurements. The maximum measured differential time delay through both heads and through the write and read electronics is of the order of 3 μsec. Further efforts will be made to measure the individual head delays and the delays in the various parts of the electronics.

(M. D. Freedman)

5. Core Storage

The core memory test model had run for a total of 1100 hours at the end of October. A large part of this time was devoted to locating the sources of errors in the information storage and retrieval cycle. At present, the mean free error time is two hours when operating at 1.5 μs. cycle time. The fundamental reasons for this high error rate have not been found; investigation of this problem will be continued.

(S. R. Ray)

6. Paper Tape

Several apparently acceptable 1000 char/sec. readers are on the market, but more detailed information is needed. They are: Burroughs 441, Digitronics 3500, Elliot and Potter. The choice of punches seems to be between Soroban GP-2-300, 300 char/sec., and Teletype BRPE 110, 110 char/sec.

Discussion with Flexowriter representatives showed that the Flexowriter, as supplied, would not meet all our requirements for tape editing and printing, although Flexowriters have been modified by Los Alamos to come closer to our needs. Of the equipment so far surveyed, the Lincolnwriter, a combination of IBM typewriter and Soroban coding keyboards, comes closest to our requirements. Apparently there is no readily available electric typewriter with more than 44 type bars.

(C. S. Wallace and Personnel of Coordinated Science Laboratory)

7. I/O Buffering

A naive analysis of the requirements of interplay suggested that simultaneous operation of several i/o channels (including magnetic drum) would require at least one and a quarter words of buffer storage for each channel. This result, together with the necessity of keeping track of the main memory addresses currently used in each block transfer, showed that the concept of interplay would require a considerable amount of equipment for its realization. The possibility of using magnetic core buffer storage, and the requirements of other interplay functions such as error detection, introspection by the computer to determine its interplay status, etc., are being investigated.

(C. S. Wallace)

8. Control Design

As information is transferred from place to place in the MAU, the various selectors feeding the registers will have to be properly set. The setting of these selectors will occur at the same time as certain gates are opened and closed. Therefore, if the logic required to set selectors should happen to take a longer time to operate than the logic to turn gates on and off, the machine will be slowed down. As a result, considerable time has been spent attempting to design M selector and A, S, Q and R selector control logic which was fast and at the same time speed independent. Unfortunately the results of these efforts are somewhat disappointing in that a unit operation involving only a shift without resetting any selectors will take less time than a unit operation in which selector settings are changed. A unit operation which sets M selectors takes approximately 33% longer than a simple shift and one in which A, S, Q or R selectors are changed takes 45% longer than a simple shift. These figures do not apply to cases where one requests the selector setting which already is set.

(R. E. Swartwout)

9. MAU End Connections

Attention was given to the Boolean expressions for the end connection logic. These expressions were checked for accuracy and conformity with the modified control sequences of File No. 337. Three drawings showing the details of the end connection logic in the MAU were made. The first drawing includes bit positions 39 to 44^* in Q and R and -3 to 4 in A and S. The second drawing covers bit positions 42^* to 44^* in A and S and -1 to 2 in Q and R. The third drawing shows the details of the special decoders, predictors, adders and detectors shown in block form on the first two drawings.

(J. O. Penhollow)

PART II

CIRCUIT RESEARCH PROGRAM

(Supported in part by the Office of Naval Research under Contract Nonr-1834(15).)

1. Summary

H. Guckel and R. K. Crow spent most of the month of October writing the final flow-gating report. Further information was needed on the behavior of N-100 transistors under switching conditions in order to correlate the results of flow-gating systems tests with switching theory. This led to an investigation by R. K. Crow of general techniques used in measuring transistor parameters: some salient points will be discussed below. C. Afuso continued his work on the low-swing difference amplifier system and designed several new topologies. K. E. Batcher started a program studying the directivity in tunnel-diode circuits without the use of transistors or a multi-phase transfer system. Some of the work is described in more detail below.

2. Tunnel-Diode Circuitry

In the Technical Progress Report for August a system was described using transformer coupled tunnel-diode twins and earlier in the year a system was evaluated (See Technical Progress Report for June, 1960) in which transistors were used as directivity elements.

An attempt was made to find methods for achieving directivity in tunnel-diode circuits without resorting to transistors used in an emitter-follower connection.

As an example of the problem consider the circuit in Figure 1. It is desired to transmit information from twin-1 to twin-2. By lowering the supply potentials on twin-2 by the amount ΔE we cause diode D to conduct. If twin-1 is in the high-voltage state, twin-2 will tend to the high-voltage state. Unfortunately, at the same time if twin-2 is in the low-voltage state, twin-1 will tend to the low-voltage state. It is just as likely that twin-1 will change rather than twin-2 changing. Thus diode D does not cause directivity since when it is conducting information can flow either way through it and when it isn't conducting information is stopped in both directions.

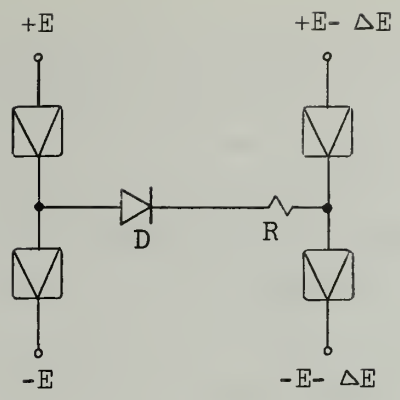

Figure 1

DC Transfer System for Tunnel-Diodes

One way around this is to lower the negative potential on twin-2 by an additional amount E_1; this is shown in Figure 2.

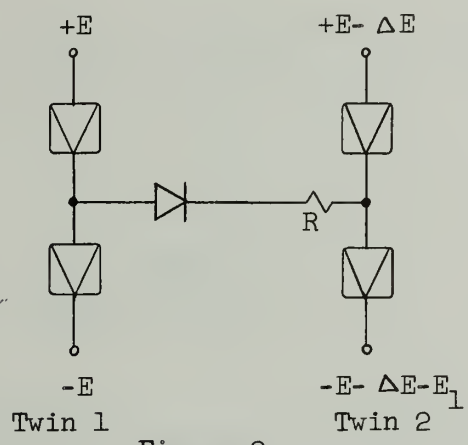

Figure 2

Prebiassed Form of the DC Transfer System

This changes the V-I characteristic of twin-2, (See Figure 3).

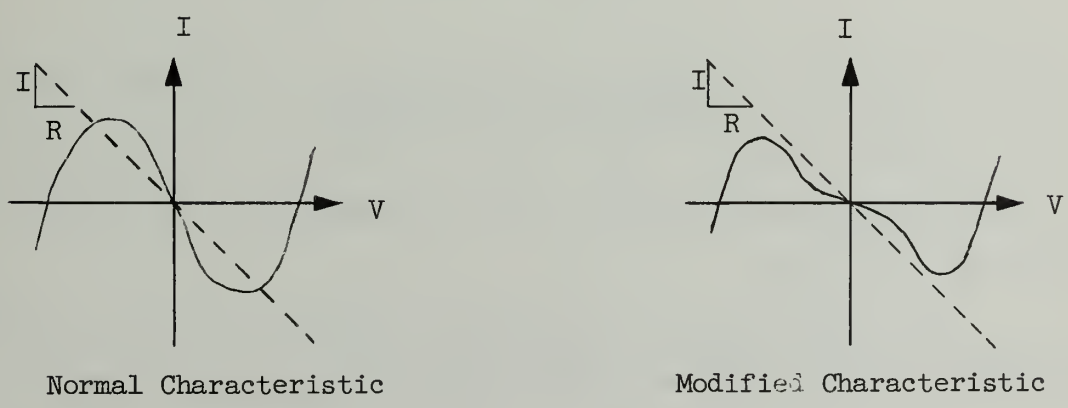

Figure 3

Negative Resistance Modulation

The R load line intersects the characteristic once in the middle so that the old state of twin-2 is destroyed and it is now unable to change in either direction so that twin-1 can change it easily. By raising the potentials of twin-2 back to E and -E the new state is locked into place. This is essentially the idea used in the method called "negative resistance modulation" and described in last month's Technical Progress Report, but here dc coupling is used.

Another possible scheme is to represent information by amplitudes of a-c signals instead of d-c signals. We shall call this the "harmonic logic system". Consider the circuit in Figure 4.

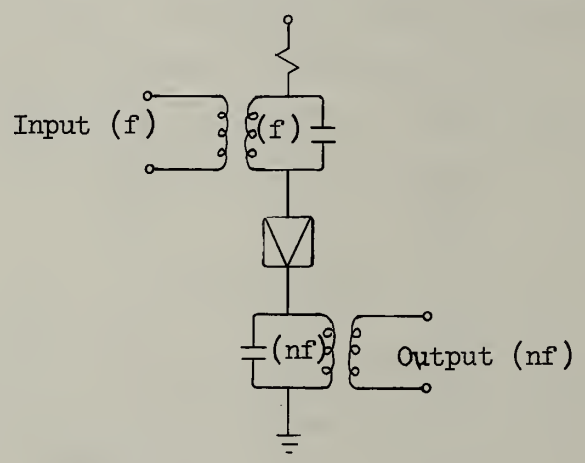

Figure 4
Harmonic Transfer System

The top tank circuit is tuned to a frequency f while the lower tank circuit is tuned to a harmonic, nf. When an input signal of f is applied, the tunnel-diode acts as a harmonic generator and an output of frequency nf is generated. We could expect the forward gain of this circuit to be higher than the reverse gain so that directivity is achieved.

The tunnel-diode can also act as a frequency mixer so that logic elements are possible. Two of these are shown in Figure 5.

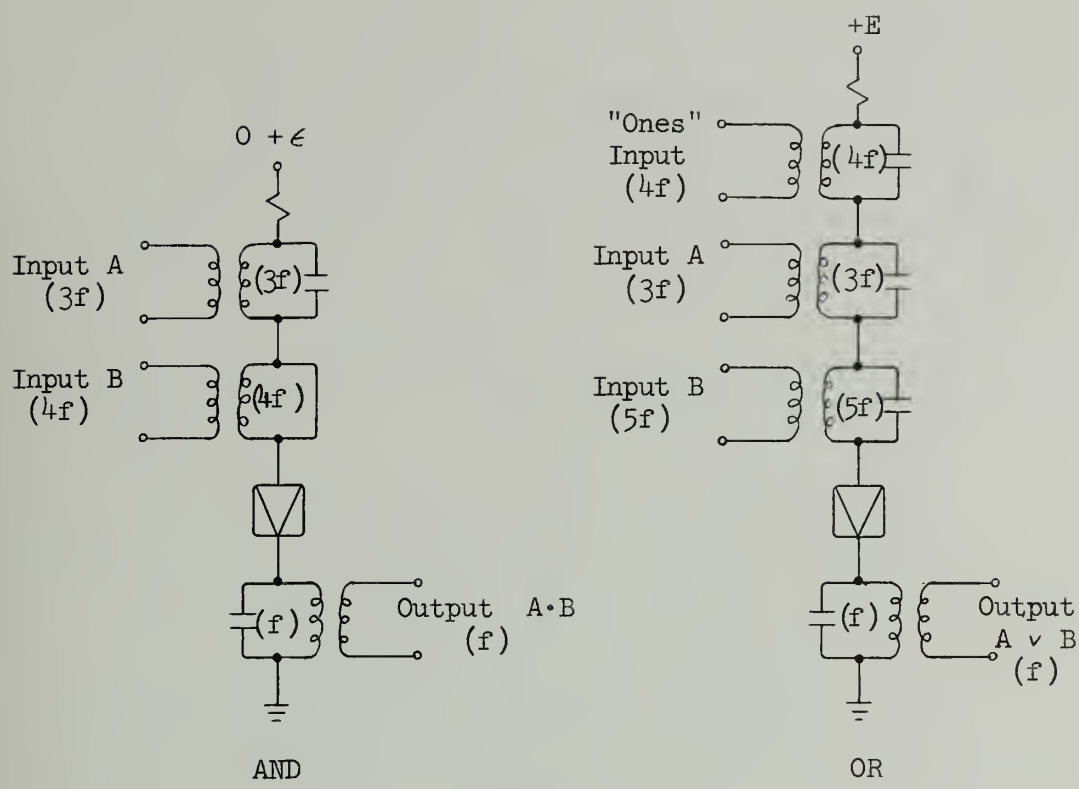

Figure 5

Harmonic Logic Circuits

These logic elements are not directive so that harmonic generators would have to be used to insure proper operation. Note that the relative phase of the inputs is not important. However, we get into trouble in logical loops such as the logic circuit in Figure 6.

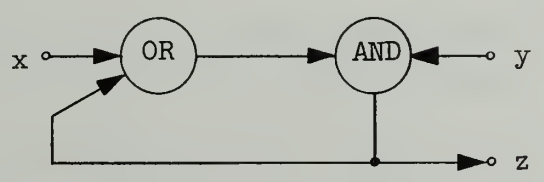

$z = (z \vee x)y$

Figure 6

Dangerous Loop for Harmonic Logic

Its mechanization is shown in Figure 7.

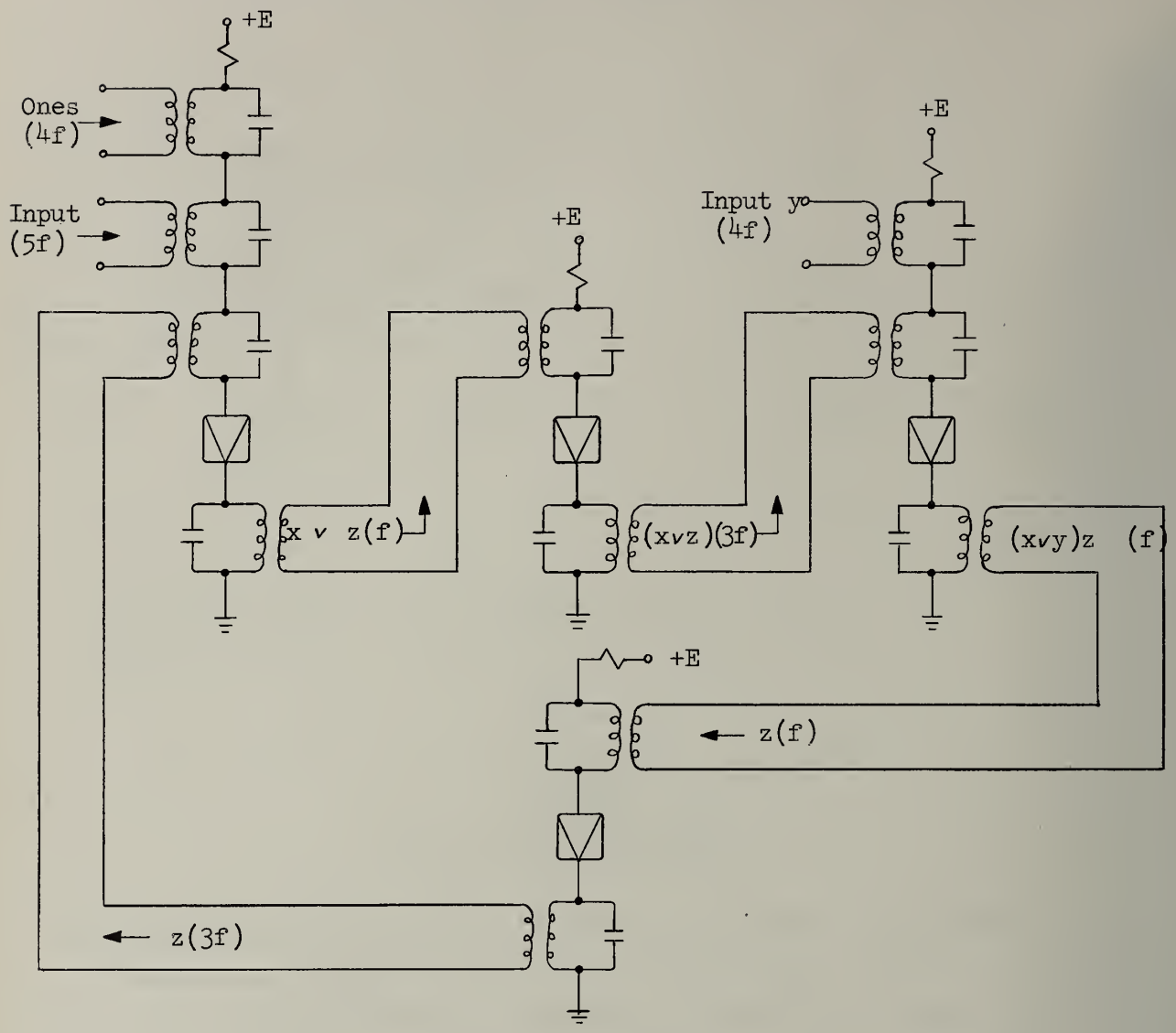

Figure 7
Mechanization of Figure 6

The phase delay around the loop for z must be multiple of 2π or else z will not regenerate itself.

One possible way out of this problem is to rectify and filter the z signal and have this d-c signal gate on a tunnel-diode oscillator. Then the phase delay is not important.

The above scheme is asynchronous (despite the a-c signals) but it might prove impractical for several reasons:

a) The maximum signal frequency (which is an order or two below f) might be too low.

b) The frequency conversion gain of a tunnel-diode might be too low.

c) Unreliability because elements might oscillate without an input.

These questions will be looked into in the study program on tunnel-diodes.

3. Measurement of Transistor Parameters

One equivalent circuit which is often used to represent the transistor is shown in Figure 8.

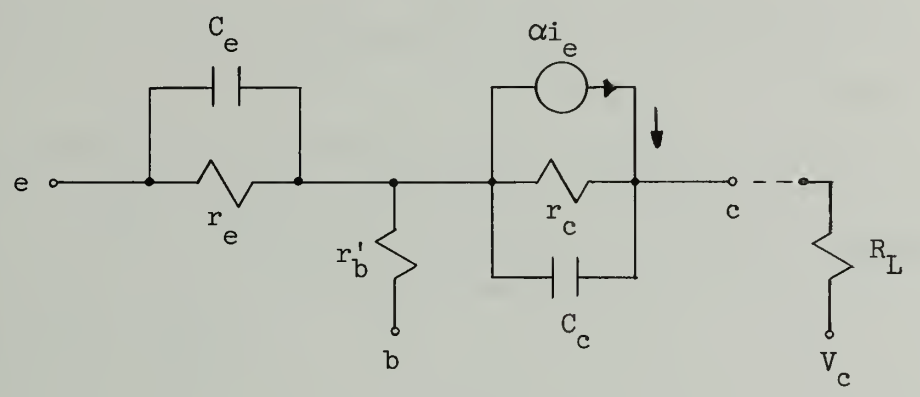

Figure 8

Standard Transistor Equivalent Circuit

The parameters are specified at a particular bias point, $[I_e, V_c]$, and it is assumed that the variation of the input signal is small with respect to the bias conditions. In the circuit α is a function of frequency and all other parameters are assumed constant. For small signal swings, at a particular bias point, if the parameters are measured carefully at that bias point, and if an appropriate function is chosen for α, and assuming the signal frequency variation is somewhat less than the cutoff frequency of the transistor, then the above circuit gives a reasonable representation of the transistor.

In practical switching circuits, it is necessary that the signal swings be large. Often the transistor goes from completely on to completely

off. From qualitative device considerations, it is known that for large variations of i_e and hence V_c,

a) r_e and C_e are strong functions of i_e

b) r_b' is a function of i_e and V_c

c) C_c is a strong function of V_c

d) α is a function of i_e and V_c

Even for a simple device geometry the exact functional relationships stated above are nonlinear, and not easy to work with. For instance, assuming

$$C_c = A\, V_c^{-1/2}$$

and all other parameters constant, the collector response of a grounded emitter with an appreciable R_L requires the numerical solution of a nonlinear differential equation*.

Some of the parameters of Figure 8 (besides α) are frequency dependent. Now in fast switching circuits, both the frequency and amplitude dependence of the parameters affect the output response. For practical device geometries, this amplitude and frequency dependence of the transistor parameters is quite complicated and produces equations which require numerical solutions. Indeed, many of the device parameters for practical geometries have not been calculated, i.e. no correlation with device theory has been established.

In order to gain some quantitative information about the device behavior at large amplitudes and high frequencies, the following experiment is suggested.

Consider Figure 8 as a grounded base amplifier driven by a constant current pure sine wave source and observe the collector current response. If $i_e = A \sin \omega t$ then for $\omega \ll \omega_c$, $A \ll I_e$, the output will be

$$\frac{i_c}{i_e} = \alpha_0, \quad i_c = \alpha_0 A \sin \omega t.$$

---

* A typical calculation is contained in <u>IRE Trans. Electron Devices</u>, Oct., 1956

If we keep $\omega \ll \omega_c$ but let $A \rightarrow I_e$, the nonlinear characteristics of α will distort the output waveform so that, from Fourier analysis the output will in general, contain, besides the fundamental frequency of the input, harmonics which are functions of the nonlinearity of the device. If we now increase ω, with A still large, the harmonic content of the output will be a function of both the amplitude and frequency nonlinearity of the transistor parameters.

For a practical experiment of this type one would consider the transistor in terms of its h parameters, since these are defined directly in terms of ratios of input voltages and currents. Using this technique then, one could obtain, at a particular frequency and amplitude of signal, a "second order" approximation to transistor parameters by taking the dominant term or terms of the output series. These expressions would be Laplace transformable.

Of course, the difficulty arises as to what frequency to measure the parameters at in order to get a reasonable representation of the device to be used in pulse response calculations. In the range of the α cutoff frequency at least, the output series would vary with frequency. By studying experimentally the magnitude of the variations of the output series with frequency and amplitude, it is hoped that one could get an idea as to what frequency would be appropriate. As to amplitude variations, one would use approximately the amplitude variation to be expected in the switching circuit.

Experimental determination of the Fourier constant of the output could be approached in two ways. The classical way is to use a harmonic analyzer to measure the output harmonics directly. One would also need the phase with respect to the input. Another approach would be to observe, on a fast scope, the wave shape of the output. From this wave, the Fourier coefficients can be obtained graphically.

In the near future a complete study program on the subject of transistor evaluation at high frequencies and the correlation to pulse behavior will be started.

PART III

SWITCHING CIRCUIT THEORY

(Supported in part by the Office of Naval Research under Contract Nonr-1834(27).)

Analysis of the program for testing asynchronous circuits which was described in the June progress report has now been extended. This analysis was originally described in a numbered conference paper presented at the October A.I.E.E. meeting, and the extension has now been set down in a revision of this paper - Digital Computer Laboratory Report No. 104.

Principal extensions are new rules for the generation and combination of "change paths". A "change path" is defined as a sequence of states of a circuit, formed by permitting just one node to change at each step in the sequence. The node undergoing the change is always taken as one which was not capable of changing in the previous state, i.e. a "newly excited" node. A change path is terminated if (a) no newly excited nodes occur, (b) more than one newly excited node occurs, or (c) the node undergoing a change interacts with a node which has changed in this or some concurrently occurring change path. Interaction is detected by performing a previously described calculation involving the interconnection matrix M.

Whenever interaction of a given node of path A with some concurrently occurring change path B is detected, path B is retraced up to the point of interaction, starting with the terminal state of path A. This retraced path is then treated as yet a third path C. New change paths are formed by starting with the terminal states of previously obtained change paths and carrying out changes on newly excited nodes.

In the present scheme, combinations of change paths result only from interaction. The result of the use of these rules should be a reduction in the time and memory capacity required to carry out circuit analysis.

(W. D. Frazer)

PART IV

DATA REDUCTION METHODS

(Supported in part by the National Science Foundation under Grant G9503.)

Automatic Scanning of Bubble Chamber Photographs

A very preliminary version of a tracking routine has been programmed and is under study. Illiac can simulate the existence and behavior of a random-access, fixed, photographic store (the drum is actually used for this store) containing a photograph of a high energy event in a hydrogen bubble chamber. The tracking routine has the function: given the coordinates of one point on a track and a very rough orientation of the track, follow the track (recording coordinate pairs at appropriate intervals) until the track either ends or gets confused with other tracks or objects in the chamber. These tracks are characterized by a slight curvature depending on the momentum of the particle and the magnetic field in the chamber and have numerous gaps due to the stochastic nature of the ionization loss of a fast charged particle moving through matter. In addition, these tracks are immersed in a heavy noise background consisting of other tracks in the chamber, low energy election spirals, dirt in the chamber, equipment such as thermocouples in the chamber, scratches on the film, etc.

The initial formulation of the tracking routine is being carried out with two goals in mind: first, minimize the input data rate, i.e., refer to the photograph as little as possible and input as few points as possible, which in turn implies development of techniques for tracking which exploit only points very near to or on the track; second, minimize the time consuming arithmetic procedures involved and replace them to the extent possible by logical decision procedures. In brief, a 7 x 1 raster centered on a point on the track is examined. This defines $2^7 = 128$ possible aspects each of which determine (via a table look-up) the strategy on the next observation. From a sequence of these observations, separate histories over as many as seven successive observations can be built up. These histories give information on the gap frequency, the width of the track, the quality of the track, the gradual interference of other tracks approaching from the left or right, etc. These histories, in turn, define (again through

table look-up procedures) the strategy to be adopted for future observations. For example, they control possible shifts in the raster to accommodate curving tracks, changes in the stepping interval along the track, termination of tracks which have either faded or entered confused regions, initiation of special procedures for the approach of other tracks, the order of the extrapolation equation to be used to predict the point for the next observations, etc.

It is felt that such an approach to the tracking problem is necessary in order to cut down the input data rate and the amount of time consuming arithmetic work. This, in turn, is necessary to enable the over-all data reduction system to match the rate at which photographs of such high energy events are produced.

(M. Kuchnir, B. H. McCormick, S. Penny*, J. N. Snyder)

---

* Mr. Penny left the Digital Computer Laboratory in June, 1960 and is now a staff member of the Radiation Laboratory of the University of California, Berkeley, California.

PART V

ILLIAC USE AND OPERATION

New Illiac Codes

During the month of October, three new routines were added to the Illiac library.

E 10 - 310 Evaluation of Exponentially Weighted Semi-Infinite Integrals by Quadrature (Laguerre Quadrature). This routine uses a form of Gaussian Quadrature appropriate to the interval $(0,\infty)$ to evaluate the integral

$$\int_0^\infty e^{-x} f(x)\, dx \approx \frac{1}{2^P} \sum_{k=1}^{N} A_k f(x_k).$$

The values A_k and x_k are chosen in a manner such as to give no truncation when $f(x)$ is a polynomial of degree $2N - 1$ or less. In the case where the factor e^{-x} does not occur explicitly in the integrand,

$$\int_0^\infty g(x)\, dx = \int_0^\infty \left[e^{-x} \quad e^{x} g(r)\right] dx \approx \frac{1}{2^Q} \sum_{k=1}^{N} A_k e^{x_k} g(x_k) =$$

$$\frac{1}{2^Q} \sum_{k=1}^{N} B_k g(x_k).$$

It is assumed that the function $e^x g(x)$ may be closely approximated by a polynomial function.

(John Ehrman)

E 11 - 311 Evaluation of Exponentially Weighted Infinite Integrals by Quadrature (Hermite Quadrature). This routine uses a form of Gaussian Quadrature appropriate to the interval $(-\infty, \infty)$ in order to evaluate the integral

$$\int_{-\infty}^{\infty} e^{-x^2} f(x)\, dx \approx \frac{1}{2^P} \sum_{k=1}^{N} A_k f(x_k).$$

The values A_k and x_k are chosen in a manner such as to give no truncation error when f(x) is a polynomial of degree 2N - 1 or less. In the case where the factor e^{-x^2} does not occur explicitly in the integrand,

$$\int_{-\infty}^{\infty} g(x)\, dx = \int_{-\infty}^{\infty} e^{-x^2} \left[e^{x^2} g(r)\right] dx \approx \frac{1}{2^Q} \sum_{k=1}^{N} A_k e^{(x_k)^2} g(x_k) =$$

$$\frac{1}{2^Q} \sum_{k=1}^{N} B_k\, g(x_k).$$

It is assumed that the function e^{x^2} g(x) may be closely approximated by a polynomial function.

(John Ehrman)

KSL 2.03 - 313 <u>Means, Standard Deviations, Third and Fourth Moments about the Means.</u> For each of a set of v variables, this routine will calculate the mean, the standard deviation, and the third and fourth moments about the mean. Much can be learned about the sample distribution from these four statistics. The mean is a measure of central tendency. The standard deviation is a measure of the dispersion of the distribution. The third moment indicates the amount and direction of skewness. The fourth moment is a measure of the kurtosis of the distribution. The routine will read data either in the form of signed fractions or in the form of unsigned single digits (0, 1, ... 9). If means and standard deviations <u>only</u> are desired, computer time can be saved by suppressing the calculation of the third and fourth moments. In any event, this routine is preferred over K-17 (also K-8, KSL 2.01) for the v(v + 1)/2 cross-products are not calculated. For a large v, the saving in computer time may exceed 90%.

(Freda Fischer)

Illiac Usage

During the month of October, specifications were presented for 18 new problems. This list does not indicate how the Illiac was used because large amounts of machine time have been consumed by problems with numbers less than 1784T. Numbers followed by T are for theses.

1784T University of Sydney, Australia. Relation of Cattell's and Eysenck's Personality Factors. Illiac will be used to attempt to relate the major personality dimensions of Cattell and Eysenck. "Markers have been selected for Eysenck's neuroticism and introversion factors, and for Cattell's neuroticism, introversion, and anxiety factors. Cattell insists that Eysenck has overlooked anxiety, and Eysenck insists that anxiety is neuroticism plus introversion and represents overfactoring..."

This study will start with a correlation matrix of 46 variables obtained on Silliac at the University of Sydney. The variables were selected from the tests of Cattell and Eysenck. Latent roots will be obtained using M-22. Communalities will be estimated using KSL 1.53. After the factors are extracted, these will be rotated both to orthogonal simple structure using KSL 1.80 and oblique simple structure using KSL 1.90.

1785 Coordinated Science Laboratory. Transfer Characteristics of Time-Varying Systems. The transfer function of the given class of linear time-varying systems to be studied is given by

$$H(s,t) = \sum_i \left[\frac{A_i(t) + SB_i(t)}{w_i^2 + (\alpha_i + S)^2} + \frac{C_i(t)}{\gamma_i + S} \right], \quad S = jw$$

where A_i, B_i and C_i are defined by auxiliary subroutines. This routine will output either H, $|H|$, $\ln|H|$, $20 \log_{10}|H|$, the phase of H, or any combination of these versus w for different values of t. To facilitate plotting the results, an auxiliary program is planned to convert the floating point output to dataplotter format.

1786T Institute of Labor and Industrial Relations. Conformity and Group Tenure. This problem deals with the general area of individual conformity to group norms, perceptions and anticipations. The subjects of the study were 59 employees of an industrial firm in Northern Illinois. All of the subjects were in the same department which involved general assembly work.

The actual test was composed of three segments, each having thirty items. Sample item: Doing work I think is important. The three segments were designed to find the individual's norms, perceptions of the present situation and his anticipations for the future with regard to the item. The mean of these segments is to be used for the general group feeling for each. A Z-Score is to be computed to indicate the difference between the individual and group score in standard units.

These Z-Scores will be correlated with these different sets of data. First, the Z-Score will be correlated with the length of time the individual has been in the department. A negative correlation is expected. Second, a correlation between the Z-Scores and previous experience will be correlated with level of education. A positive correlation is expected.

1787T Psychology. Self-Evaluation as Related to Parental and Peer Attitudes. The purpose of the study is to investigate the influence of parental and peer attitudes upon the self-evaluations of pre-adolescents and adolescents. The study will attempt to determine whether parental and peer attitudes toward individuals at the two age levels are related to their self-descriptions, and whether the opinions of these significant others have differential effects upon the concept of self at these two developmental stages.

One important reason for using Illiac is to factor analyze the rating form utilized in the study. The number of factors emerging from the test when applied to the ratings which were obtained for the study will be determined. The rating form was originally devised so that its use would provide ratings of a mainly evaluating nature. However, this is only the second time the rating form has been used, and it has never been factor analyzed. The ratings are made according to a 5 point scale, and it is important to determine the positive and negative ends of the scale for each of the items comprising the rating form.

A second reason for using Illiac is to obtain the reliability coefficients needed for the study.

1788 Coordinated Science Laboratory. Mass Spectrometer Design. The program is designed to determine the optimum parameters in an R. F. type mass spectrometer to be used in ultra high vacuum research. Specifically, the program will choose the parameters to obtain optimum ion transmission subject to the required resolution.

1789 Psychology. Time Series Analysis of Cancer Data. This research problem has developed out of a factor analysis of time series data that has been under way for almost two years. The data are a variety of metabolic and enzymatic measurements made daily over long periods of time on patients with prostatic cancer. Records on individual patients have been subjected to "P-technique" factor analysis on Illiac problem numbers 1331 and 1382.

It has been suggested that a "diagonal method" of factor analysis might be used to "partial out" time trend effects before proceeding to the rest of the factor analysis. It is hoped that this technique will remove several "artifact factors" from the data and simplify the identification and matching of factors from study to study.

Cancer researchers point out that prostatic cancer patients who show improvement under estrogen therapy tend to discharge large amounts of an enzyme, glucuronidase, in urine shortly after estrogen therapy begins. This suggests that particular attention be given to the analysis of changing patterns of metabolic and enzymatic interaction during this period.

1790T Agricultural Economics. Resource Allocation in Canning Crop Production. The problem involves an investigation of the economics of growing canning crops as a part of the cash grain farming system in the Central Illinois area, using data collected from 70 farms via mail survey. Peas, sweet corn and pumpkins are the canning crops in question.

The Illiac will be used to compute multiple regressions using each of 13 reasons for growing canning crops ranked by farmers as most important, not of much importance, or of no importance at all, as the dependent variables and different sets of 4 independent variables out of 14 independent variables. This analysis is an attempt to explain why farmers answered the questions as they did but more specifically to explain why farmers grow canning crops.

The Illiac will also be used to solve a linear programming model by the simplex method. The purpose of this model will be to determine if it is profitable to grow canning crops, at what acreage level, and in combination with what other canning crops and field crops, subject to limitations placed on these growers by the contract with the canning company.

1791T Sociology. Simulation of Business Decision-Making. The main objective of this program is to develop a model of the process leading to "contracting-out" decisions in industry. The computer is to be used for simulation of some simplified versions of the projected model to determine which version best approximates existing data and to observe the effect of variation of some selected parameters.

The final decision is taken at present to be the result of the pressure of three groups: Management (M), Inside Interests (I), and Outside Interests (O). The amount of pressure exerted by each group is assumed to be dependent on a number of variables (e. g., x_{M1}, x_{M2}, ..., $x_{M\ell}$ for Management), so that the final decision may be represented by

$$\sum_{i=1}^{\ell} f_{Mi}(x_{Mi}) + \sum_{i=1}^{m} f_{Ii}(x_{Ii}) + \sum_{i=1}^{m} f_{Oi}(x_{Oi}).$$

Some x_{ij}'s are functions of the history of the process; i.e., the value of some x_{ij}'s at the time t_r depends on the decisions made at times t_{r-1}, t_{r-2}, ..., t_{r-Rij}.

1792 Digital Computer Laboratory. Function Integration. This program is designed to evaluate the integral

$$F\left[x_n\right] = \frac{1}{(2\pi)^{n/2}} \int_{-\infty}^{+\infty} \cdots \int_{-\infty}^{+\infty} \exp\left\{\sum_{i=1}^{n-1} \left(\frac{x_i - x_{i-1}}{\Delta t}\right)^2\right\} dx_0 dx_1 \ldots dx_{n-1}$$

using Monte Carlo techniques. For large n

$$x_n \approx x(t) \qquad (t = n\Delta t)$$

where x(t) is the solution to the diffusion equation. The object of the present calculation is to test the accuracy obtainable by Monte Carlo techniques and to see how the computing time depends on this accuracy.

1793 Physical Chemistry. Generation of Biased Polymers. Non-intersecting random walks will be generated on the Illiac. These will be biased in a manner which will insure configurations not obtained in the usual non-intersecting random walks. Certain properties of these walks will be studied.

1794T Agricultural Economics. Simple Regression. In order to compute standard deviations needed for testing hypotheses related to changes in farm income and resource structure, the K16 routine will be modified to allow transformation of the variables and to bypass the multiple correlation features of the routine. The functions performed will be similar to K-8 but will include difference transformations not now included in either routine.

1795T Agronomy. Seeding Methods for Establishment of Alfalfa. The research problem is concerned with the study of establishment of alfalfa by several methods of seeding. Four rates of seeding are included and two row widths are included in each seeding method. The problem involves finding out how these treatments effect establishment of alfalfa in terms of the stand obtained, the yield produced by the stand, and the vigor of the plants obtained by the various treatments. Vigor is measured in terms of the diameter of the tap root of the plant, height of the stems, number of stems, and dry weight of the stems. The effects of the treatments on the characteristics measured will be evaluated by analysis of variance.

1796 Mechanical Engineering. Transformation of the Boundary Layer of a Supersonic Stream Expanding Around a Corner. A code for the Illiac to calculate the change within the boundary layer of a supersonic stream expanding around a corner will be developed. The momentum thickness ratio of the boundary layers for a certain pressure ratio across the expansion is given by

$$\frac{\theta_2}{\theta_1} = \left(\frac{1-c_{1a}^{\,2}}{1-c_{2a}^{\,2}}\right)^{\frac{1}{h-1}} \frac{c_{1a}}{c_{2a}} \frac{\displaystyle\int_0^1 \frac{\varphi_1(1-\varphi_2)}{1-c_{1a}^{\,2}\varphi_1^{\,2}}\, d\zeta}{\displaystyle\int_0^1 \frac{\varphi_1(1-\varphi_2)}{1-c_{1a}^{\,2}\varphi_1^{\,2}}\, d\zeta}$$

where $\varphi_2^{\,2} = \dfrac{c_{1a}^{\,2}(1-c_{2a}^{\,2})\varphi_1^{\,2} + (c_{2a}^{\,2}-c_{1a}^{\,2})}{c_{2a}^{\,2}(1-c_{1a}^{\,2})}$

$$\varphi_1 = \mathcal{J}^{\frac{1}{n}}$$

The $\frac{\theta_2}{\theta_1}$ ratio will be calculated for different parametric values of c_{1a}, c_{2a} and n.

1797. Coordinated Science Laboratory. Boltzmann Equation Solutions. The equation to be solved is

$$\frac{\partial f}{\partial t} = g(x)\,\frac{\partial f}{\partial x} + h(x)\frac{\partial^2 f}{\partial x^2}.$$

f(x, t) is desired, given f(x, 0).

The manner in which the high velocity peak (velocity αx) diffuses into the main body of the distribution function is to be investigated. This will be compared to experiments.

Simple difference equation solutions with small increments in x and t will be used. Print out will be made every few points. g(x) and h(x) will be entered in tabulated form.

1798 Institute of Labor and Industrial Relations. Local Union-Management Relations. Data on 51 variables in 37 Illinois establishments as of 1955 and again as of 1959, using a standardized schedule and interview methods have been collected. The objective is to factor-analyze these data (a) by variables, and (b) by establishments for the purpose of developing a system of description and comparison and of testing a variety of hypotheses about the nature of the local union-management relationship.

To achieve these objectives, the following computer steps are desired:

(1) An R factor analysis based on 74 establishments (combining the samples of the two time periods) and 52 variables (including time as a variable).

(2) A Q factor analysis based on the 37 establishments and 104 variables (combining the two time periods).
As a first step, the raw scores will be converted into standard scores. This is to be done twice (for convenience of analysis)--once with a mean of 0 and a standard deviation of 1, and once with a mean of 50 and a standard deviation of 10.

In the case of each factor analysis, an inter-correlation matrix, factor loadings based on the principle axes method with varimax rotation, and factor scores will be obtained.

1799 Psychology. The Exploration of the Structure of Conflict. A number of group and individual test results are to be analyzed to indicate the relationship between methods of measurement and between the kinds of conflict measured in these cases.

The raw data will be standardized by the cumulative percentage-T-score program. From these scores at least six different score matrices will be assembled which will, in turn, each be correlated, analyzed for centroid factors, rotated by oblimax, and rotated iteratively for simple structure.

1800T Mechanical Engineering. Gear Capacity Calculation. The load carrying capacity of the lubricating film on a gear will be calculated by finite difference integration of the hydrodynamic equation.

1801 Mathematics. Discrete Normal. The normal distribution at finitely many points (say 200 points equally spaced from -4 to +4) is to be studied. For each run, a boundary for the extent of the normal distribution is set.

The problem is to stop when a boundary is reached and make a statement about the mean θ of the normal distribution, i. e., the statement that θ is large or θ is small with a certain specified probability of being wrong and to minimize the expected number of observation (EN). Boundaries which will make EN small are being sought.

Table I shows the distribution of Illiac machine time for the month of October.

TABLE I

	Hrs:Min	
Scheduled Maintenance	65:09	
Unscheduled Maintenance	14:45	
Drum Engineering	5:50	
R.A.R.	2:40	
Leapfrog	10:13	
Library Development	4:22	
Demonstrations	:50	
Classes	13:24	
		117:13

Use by Departments

Agricultural Economics	8:35
Agronomy (00 15 65 330 38)	:18
Agronomy	2:47
Animal Science	6:01
Bureau of Educational Research	10:38
Chemistry (NONR 1834(13))	2:12
Chemistry (NSFG 7336)	17:28
Chemistry	82:18
Civil Engineering (NSF-G6572)	1:52
Civil Engineering (NONR 1834(03))	1:31
Civil Engineering (CAT. TR. CO. 442-220-310)	:09
Civil Engineering	30:08
Coordinated Science Lab (DA-36-039-SC56695)	56:24
Dairy Science	:17
Digital Computer Lab (AEC AT(11-1)-415)	13:45
Digital Computer Lab (NSF GRANT 9503)	12:14
Digital Computer Lab (NONR 1834(27))	:44
Digital Computer Lab	1:17
Economics (NSFG 7056)	3:22
Economics	:04
Electrical Engineering (NASA - NSG 24 - 59)	:02
Electrical Engineering (IOWA GRANT 1955)	1:08
Electrical Engineering (NONR 1834(02))	5:02
Electrical Engineering	15:57
Food Technology (50-343)	1:01
Health Service	:34
Inst. for Res. on Excep. Chil. (HE and W SAE 8204)	:54
Inst. for Res. on Ex. Chil. (U.S.P.H. NIH M-3207)	1:04
Institute for Research on Exceptional Children	:22

Inst. of Communications Res. (44-28-20-378)	1:14	
Inst. of Communications Res. (46-28-20-364)	6:04	
Inst. of Industrial and Labor Relations	3:09	
Mathematics	5:38	
Mechanical Engineering (NSG-13-59)	:11	
Mechanical Engineering	6:34	
Mining and Metallurgical Eng. (TRUS AF6770)	:18	
Mining and Metallurgical Engineering	:28	
Physics (AF 49(638)-529)	:04	
Physics (NONR 1834(05))	5:15	
Physics	:59	
Psychology (AF 49(638)371)	8:05	
Psychology (SAE 8383)	:19	
Psychology	53:26	
Sociology	17:52	
State Water Survey (DA-36-039-SC75055)	1:28	
State Water Survey	4:34	
Theo. and Appl. Mechanics (NOBS 72069)	:12	
Theo. and Appl. Mechanics (DA-11-070-508 ORD)	4:28	
Zoology	:32	
University of Sydney	2:21	
		401:19
		518:32

Error Frequency and Analysis

The machine is normally used for "engineering" and maintenance between 7:00 a.m. and 10:30 a.m. Since the periods between 7:00 a.m. and 10:30 a.m. together with certain irregular periods, such as Saturdays and Sundays, are devoted to a heterogeneous group of engineering, maintenance and laboratory functions, it is more instructive, from an error standpoint, to look at the periods between 10:30 a.m. and 7:00 a.m. of the next day in order to make an observation of the error frequency in the machine. This is the actual period when the machine is designated for use, although certain engineering procedures frequently require the scheduling of extra maintenance time. With this in mind, a summary table has been prepared using the period between 10:30 a.m. and 7:00 a.m. of the next day. This table lists the running time when the machine was operating, the amount of time devoted to routine engineering, the amount of time devoted to repairs because of breakdowns, and a number of failures while the machine was listed as running. Each failure was considered to have terminated a running period and was followed by a repair period in preparing this table. Since the

leapfrog code is our most significant machine test, the length of time which it has been used on the machine is listed separately, together with the number of errors associated with that particular code. This information for the month is presented in Table II.

It is important to notice that, except during scheduled engineering periods, any interruption of machine time that was not planned is considered a failure in this table. In rare cases, where the failure is not known until a later time, it is possible that no repair period is associated with the failure. This over-all system has been adopted because it makes it possible for a machine user to estimate directly the probability that the machine will be "running" any instant of time and the probability of a failure during any given interval of running time.

Table III presents a summary of errors or interruptions for October.

TABLE III

Memory	10
Control	1
Punch	2
Reader	1
Drum	4
Scope	1
Unknown	3
Total	22

TABLE II

DATE	RUNNING OK TIME	REPAIR TIME	SCHEDULED ENGINEERING	INTERRUPTIONS OR FAILURES STOPPING OK TIME	TYPES OF INTERRUPTIONS OR FAILURES CAUSING REPAIR TIME	WASTED	LEAPFROG	FAILURES STOPPING LEAPFROG
10/3/60	21:10	:10	2:40	2	(1) Leapfrog failed 2^{-22} (2) Unknown	0	:25	2
10/4/60	21:20	:00	2:40	0		0	:27	0
10/5/60	21:06	:00	2:54	0		0	:58	0
10/6/60	19:53	:17	3:50	2	(1) Control error (2) Unknown	0	:08	0
10/7/60	21:15	:15	2:30	2	(1) Drum failure (2) Punch #1 failed	0	:42	0
10/10/60	20:18	:20	3:22	2	(1) Unknown (2) Leapfrog failed 2^{-27}	0	:22	1
10/11/60	20:49	:00	3:11	0		0	:20	0
10/12/60	21:11	:00	2:49	0		0	:20	0
10/13/60	19:56	1:01	3:03	2	(1) Drum failure (2) Drum failure	0	:32	0
10/14/60	18:46	3:06	2:08	3	(1) Drum failure (2) Memory 2^{-22} (3) Memory 2^{-22}	0	1:10	0
10/17/60	20:46	:11	3:03	1	(1) Punch #1 failed	0	:26	0
10/18/60	20:13	:36	3:11	1	(1) Leapfrog failed memory 2^{-1}	0	:20	0
10/19/60	20:17	:15	3:28	1	(1) Leapfrog failed memory 2^{-1}	0	:38	1
10/20/60	20:57	:01	3:02	1	(1) Reader "J" erred	0	:00	0
10/21/60	21:28	:00	2:32	0		0	:27	0
10/24/60	17:11	4:19	2:30	2	(1) Memory position 2^{-1} (2) Scope failure	0	:23	0
10/25/60	19:49	:31	3:40	1	(1) Memory failure 2^{-9}	0	:31	0

DATE	RUNNING OK TIME	REPAIR TIME	SCHEDULED ENGINEERING	INTERRUPTIONS OR FAILURES STOPPING OK TIME	TYPES OF INTERRUPTIONS OR FAILURES CAUSING REPAIR TIME	WASTED	LEAPFROG	FAILURES STOPPING LEAPFROG
10/26/60	19:42	:50	3:28	2	(1) Memory failures 2^{0}, 2^{-9}, 2^{-16}, 2^{-22} (2) Memory failure	0	1:08	0
10/27/60	21:06	:00	2:54	0		0	:07	0
10/28/60	21:48	:00	2:12	0		0	:23	0
10/31/60	20:35	:00	3:25	0		0	:20	0
TOTALS	429:36	11:52	62:32	22		0	10:07	4

PART VI

IBM 650 USE AND OPERATION

Graduate College Records Program

A program (number 89') to investigate the feasibility of student record keeping has been under development and is nearing completion. The program is designed to process records of all graduate students, both resident and extramural. At the end of each semester, a single magnetic tape containing data for all students, a punched card for each student, and a printed form for each student will be produced.

The program is divided into four passes.

Pass 1 (early in the semester)

(a) Transfer from the previous semester pass 4 tape to a new tape the records of students currently enrolled. Also transfer the records of students who did not receive grades in courses taken during the previous semester(s).

(b) Record the current semester course signups on the tape.

(c) Detect errors in the data cards of this pass.

Pass 2 (at the three-quarter point of each semester)

(a) Update the tape produced by pass 1 with language examination results, preliminary examination results, final examination results, and scholarship information, credits transferred from other institutions, and credits transferred from University of Illinois undergraduate work, majors, date student entered the University of Illinois graduate school, degree expected this semester, if any, name changes, accumulations for readmitted students, and late grades from previous semesters.

(b) Correct errors in the data cards of pass 1 and detect errors in the data cards of this pass.

Pass 3 (at the end of the semester immediately following final examinations)

(a) Update the tape produced on pass 2 with any information not known on passes 1 or 2.

(b) Record the grades.

(c) Compute accumulations and grade averages and place these on tape.

(d) Punch a card for each student containing the accumulations and any errors detected.

(e) Sort the tape into major departments and print out the individual semester reports (a binary sorting method is used).

Pass 4 (early the following semester after a majority of the late grades have been obtained)

(a) Update the tape produced on pass 3 with the late grades and any other late information.

(b) Recompute accumulations and produce a new punched card and printed form for those students whose records have been affected by the late information.

The following information is updated each semester:

Accumulative grade point average

Accumulative grade point units (the number of units that go into the grade average)

Accumulative units (includes the above plus transferred credits)

Accumulative semesters of fellowship

Accumulative units of thesis course 499 with deferred grade

Accumulative units with grade below B

Accumulative languages passed

Preliminary examination status (not taken, passed, failed)

Final examination status (not taken, passed, failed)

Date student entered the University of Illinois graduate school

Major

Alternate name (name before marriage)

Academic appointment and per cent of time of appointment

Fellowship, teaching fellowship, or scholarship

Residence status (extramural or resident)

The number of missing grades (grades not turned in by instructors and absent, excused and deferred grades)

(Mary T. Gray)

IBM 650 Usage

During the month of October, specifications were presented for nine new problems. This list does not indicate how the IBM 650 was used, because large amounts of machine time may have been consumed by problems with numbers less than 175'. Numbers followed by T are for theses.

175' Civil Engineering. Solution of Simultaneous Linear Equations. This program will solve a set of simultaneous linear equations by the Gauss-Seidel iteration procedure. Since in most engineering applications the coefficient matrices are sparse, i. e., contain only a few non-zero terms per equation, this program will only store and operate on the non-zero terms. During input, an auxiliary matrix is generated, and all logic is performed on this auxiliary matrix. In the auxiliary matrix, a zero digit denotes a non-zero term in the actual matrix, and a non-zero digit denotes the number of zero elements in the actual matrix between consecutive non-zero terms. By this technique, the size of the matrix that can be handled without auxiliary storage may be increased by a factor of 10 or more in comparison with standard programs.

176' Physics. Spin Relaxation II. The numerical integration of the matrix differential equation, $\dot{N} = MR$, performed on Illiac under the title "Spin Relaxation I", has suggested some developments for which a knowledge of the eigenvalues and eigenvectors of M is necessary. This program consists of an iterative procedure for obtaining these properties. M is a square, tri-diagonal, non-symmetric real matrix of variable size, n ($1 \leq n \leq 50$), a function of two real parameters α and λ. Its eigenvalues are all real, and positive; one is zero; (true for all α and λ). The iterative scheme to be used initially is that of determining the largest eigenvalue and the corresponding eigenvector by applying M to an arbitrary initial vector repeatedly, until there is convergence; then, orthogonalizing the process. Other schemes may be tried if difficulties are encountered.

177' Education. Medians and Quartiles for Public School Data. Medians and quartiles are to be computed for approximately 2,000 frequency tables. Simple interpolation is the only mathematical computation required.

650 will be used to count across cells to determine where the medians and quartiles fail.

Data was taken for this study from the annual report of the Superintendent of Public Schools to the State Superintendent's office. This is largely descriptive data about the school which includes: number of students in each grade, facilities available to the student, courses offered in various vocational areas, requirements of the school for graduation, etc.

178' Institute of Labor and Industrial Relations. Analysis of Personal, Work History and Mobility Characteristics of Displaced Workers. IBM 650 time is needed to compute approximately 600 cross-classification frequency distributions. These will be computed from samples of 1300, 300, 300, 300, 150, 100, 70 and 70 cases.

Chi-Squares will be computed from the frequency distributions.

The purpose of this study is to analyze the experiences of workers who were unemployed because of the closing of meat packing plants in Colombus, Fargo and East St. Louis. The research will determine "what happened to the workers after the plant closed", what kind of jobs they got, their wage rates, their evaluation of present job, length of unemployment, etc. Of particular importance is the role played by skill of worker, age, race, education, place of residence, marital status, number of children and mobility status.

Data was collected from 1900 workers via mailed questionnaires. Approximately 300 additional samples were taken via personal interview to get the reaction of the worker to the closing of the plant; to determine what the workers feel could be done to help them; to determine the economic effect of the plant closing, etc.

179' Animal Science. Z_n, C_a, M_g Balance in Rats. This problem involves a 2^3 factorial design with 24 observations on each of 32 subjects. The purpose of the study is to determine the effects of the presence or absence of (1) lactose, (2) a chelating agent, or (3) both on zinc, calcium and magnesium absorption and retention by rats. The method of least squares will be used in the analysis of variance by method of fitting constants.

180' Astronomy. Computations of Stellar Structure. First, calculations of the opacity of stellar material for various mixtures of chemical elements, at different densities and temperatures are to be performed. The main program then consists in the integration of four simultaneous, total, non-linear, first order differential equations for four variables, all functions of a fifth variable, describing the equilibrium structure of a star.

The integration procedure is the following: (Euler's method)

$$g^{0}_{n+1} = g_n + \left(\delta \frac{dg}{dx}\right)_n$$

$$g_{n+1} = g_n + \frac{1}{2}\left(\delta \frac{dg}{dn}\right)_n + \frac{1}{2}\left(\delta \frac{dg}{dx}\right)^{0}_{n+1}$$

The first formula determines the value of the dependent variable at a given point, g_n, and from the derivative at this point, a preliminary value for the same variable at the next point, g^{0}_{n+1}. From the differential equation, one can derive $\left(\frac{dg}{dx}\right)^{0}_{n+1}$. Finally, the definitive value of the dependent variable, g_{n+1}, is obtained from the second equation. δ is the integration step.

181' Civil Engineering. Railroad Rating. This program will "rate" railroad bridges for special loadings. Using influence lines, the program computes the stress in truss bridges for regular train loadings as well as for special loadings. Comparisons are then made to anticipate overloads.

182'T Marketing. Correlations of Income and Expenditure. The data are from 60 farm families in Illinois, over a ten year period--1946-1955.

This problem concerns the relation of food expenditures--including home produced food, restaurant food, food consumed at home and total food expenditures--and income. Hypotheses deal with the problem of how food expenditures as a per cent of income change as income changes, both for a given period of time and over a time period. Over time, this also pertains to the aggregate and to individual families.

The 650 will be used to compute means, variances, regression coefficients and correlations. Beta coefficients will also be computed once the first half listed above is completed.

183'T Animal Science. Magnesium in Lamb Rations. The research problem is to learn the effect of calcium and phosphorus in the ration on the magnesium requirement of the lamb. The mathematical method is the method of least squares.

Table I' shows the distribution of the IBM 650 machine time for the month of October.

TABLE I'

		Hrs:Min	
Regular Maintenance		17:10	
Unscheduled Maintenance		18:00	
Library Development - Agronomy/SSU		:32	
Library Development - DCL		1:18	
Classes		1:54	
CE 391	1:54		
Wasted		3:26	
			42:20
Use by Departments			
Agricultural Economics		2:27	
Agronomy		1:52	
Animal Science		:20	
Astronomy		:25	
Chemistry		3:14	
Civil Engineering		20:34	
Digital Computer Laboratory		9:25	
Graduate College		:21	
Mechanical Engineering		2:06	
Physics		:21	
State Water Survey		2:01	
Statistical Service Unit		121:46	
Admissions and Records	:48		
Agricultural Extension	:21		
Bureau of Educational Research	1:58		
Bursar's Office	6:32		
Business Office	32:11		
Dairy Science	2:35		
DHIA	34:49		
Education	1:51		
Horticulture	6:35		
ILIR	10:59		
Marketing	:35		
Political Science	:46		
Statistical Service Unit	:24		
Student Counseling Service	21:22		
			164:52
			207:12

Error Frequency and Analysis

The IBM 650 is normally on from 8:00 a.m. to 5:00 p.m. The machine is used for preventive maintenance from 8:00 a.m. to 12:00 noon on Mondays.

Table II' gives the daily breakdown of machine time with respect to wastage and unscheduled maintenance.

Table III' presents a summary of errors for October.

TABLE III'

Storage unit		40
533		3
Read side working improperly	1	
Loose covers	1	
Punched incorrectly	1	
Tape units, tape control, or tape read and write		17
Tape did not rewind correctly	4	
Tape unit would not write	1	
Reads incorrectly	6	
Tape unit or tape control	4	
Tape unit would not unload	1	
Tape unit would not load or rewind	1	
Fuse		1
655	1	
407		2
Printing random errors	2	
		63

TABLE II'

DATE	RUNNING OK TIME	SCHEDULED ENGINEERING	REPAIR TIME	WASTED	FAILURES STOPPING OK TIME	TYPES OF FAILURES CAUSING REPAIR TIME
10/1/60	2:35			:05	0	
10/3/60	8:53	3:57		:05	5	(1)(2)(3)(4)(5) 5 storage unit errors in index register.
10/4/60	8:56			:29	0	
10/5/60	10:15		:11	:05	1	(1) Storage unit light - index register.
10/6/60	9:42		:30	:05	5	(1)(2)(3)(4) Storage unit errors. (5) Tape unit 1 did not rewind properly coming out of high speed rewind.
10/7/60	9:30			:10	1	(1) Storage unit light.
10/10/60	4:43	3:58	:15	:04	1	(1) Tape unit 2 would not write.
10/11/60	8:35		:20	:10	1	(1) Tape unit 1 rewound at high speed instead of low.
10/12/60	12:02			:08	7	(1)(2)(3)(4)(5) Storage unit light errors. (6) Feed check light of 533 read constantly on. (7) Tape unit 1 tape off track in low speed rewind.
10/13/60	6:57		1:42	:21	10	(1) Loose covers on 533. (2)(3)(4)(5)(6)(7)(8) Storage unit lights. (9) Tape unit 1 would not carry out low speed rewind correctly. (10) Word 3 didn't punch.
10/14/60	2:38		6:10	:16	5	(1) Fuse blew in 655. (2) Storage unit light. (3)(4) Tape reading error. (5) Storage unit light.
10/17/60	:37	4:00	4:15	:08	1	(1) Storage unit error.
10/18/60	8:50			:13	6	(1)(2)(3)(4) Storage unit lights. (5) Tape unit 3 and control not in agreement on load point. (6) Tape unit 2 read error.
10/19/60	8:29		2:21	:04	3	(1)(2) Storage unit error in index register B. (3) Tape unit 1 would not unload.

DATE	RUNNING OK TIME	SCHEDULED ENGINEERING	REPAIR TIME	WASTED	FAILURES STOPPING OK TIME	TYPES OF FAILURES CAUSING REPAIR TIME
10/20/60	8:29		:17	:14	2	(1)(2) Storage unit errors in index register.
10/21/60	8:31		:20	:09	3	(1)(2)(3) Tape unit 1 had 2 read errors.
10/24/60	7:58	1:25	:17		4	(1) Tape unit 1 would not load or unwind properly. (2)(3)(4) Tape read or tape control error.
10/25/60	7:33		1:22	:05	0	
10/26/60	8:52			:11	6	(1)-(6) Suspect index register not working properly but did have valid information.
10/27/60	10:32			:13	1	(1) 407 printing random minus signs on dump.
10/28/60	8:52			:08	0	
10/31/60	5:07	3:50		:03	1	(1) 407 printing random minus signs on 407, words 4,5,6,7,8.
TOTALS	168:36	17:10	18:00	3:26	63	

PART VII

GENERAL LABORATORY INFORMATION

Seminars

"The Proposed CSL Computer", by Dr. Richard M. Brown, Coordinated Science Laboratory, University of Illinois, October 3, 1960.

"Numerical Techniques for the Theory of Stellar Evolution", by Dr. Martin Schwarzschild, Princeton University Observatory, October 17, 1960.

"Biological Computers", by Professor Heinz von Foerster, Electrical Engineering Research Laboratory, University of Illinois, October 24, 1960.

"Generalized Decomposition of Switching Functions", by Dr. Richard M. Karp, IBM Research Laboratories, Yorktown Heights, New York, October 31, 1960.

Reports

"Applications of Tunnel-Diodes in Switching Circuits", by T. Kunihiro, October 26, 1960 (Report No. 102).

"Roundoff-Error Accumulation in Iterative Procedures", by R. T. Gregory and A. H. Taub, October 31, 1960 (Report No. 103).

Personnel

The number of people associated with the Laboratory in various capacities is given in the following table:

	Full-Time	Part-Time	Full-time Equivalent
Faculty	10	1	10.75
Visiting Faculty	2	-	2.00
Research Associates	2	-	2.00
Graduate Research Assistants	8	28	23.25
Graduate Teaching Assistants	-	5	2.50
Administrative and Clerical	6	-	6.00
Other Nonacademic Employees	34	12	38.58
TOTALS	62	46	85.08

The Laboratory Advisory Committee consists of Professors H. C. Brearley, L. D. Fosdick, D. B. Gillies, G. A. Metze, B. H. McCormick, D. E. Muller, T. A. Murrell, W. J. Poppelbaum, J. E. Robertson and J. N. Snyder.

UNIVERSITY OF ILLINOIS

GRADUATE COLLEGE

DIGITAL COMPUTER LABORATORY

TECHNICAL PROGRESS REPORT

PART I - HIGH-SPEED COMPUTER PROGRAM

PART II - CIRCUIT RESEARCH PROGRAM

PART III - MATHEMATICAL METHODS

PART IV - SWITCHING CIRCUIT THEORY

PART V - DATA REDUCTION METHODS

PART VI - ILLIAC USE AND OPERATION

PART VII - IBM 650 USE AND OPERATION

PART VIII- GENERAL LABORATORY INFORMATION

November, 1960

PART I

HIGH-SPEED COMPUTER PROGRAM

This work is supported in part by Contract No. AT(11-1)415 of the Atomic Energy Commission and in part by the University of Illinois. Contract No. AT(11-1)415 is supported jointly by the Atomic Energy Commission and the Office of Naval Research.

1. Test Control

A new version of the test control has been designed. This design incorporates facilities to test transfer paths individually or as part of the add test cycle. The method of setting and resetting selectors is that presently proposed for use in the new computer control, which involves a not necessarily speed-independent decoding of previous states of the, say, (M to A-adder) selectors and a speed-independent setting of the (M to S-adder) selectors at some later point on the basis of the decoded information. Some new ideas regarding the propagation of selector reply signals are also being tried out to assist in an evaluation of their worth in the final control.

The previously described test control designs have been abandoned.

(Gernot Metze, K. Mikami, and M. Melman)

2. Core Storage Unit

Two types of noise, which affect the core memory sense signal, have been under investigation. One type of noise (internal) is attributed to magnetic coupling of the sense lines to the X-Y (read) drive lines. The other type of noise is generated outside the memory and radiated from the a.c. power lines.

The full-scale core plane stacks are in use in these experiments.

(S. R. Ray)

Complete and final layout for the decoder proper and certain related circuitry is nearing completion.

(B. E. Briley)

In the process of revising the drawing for the core memory parity adder, it was determined that a tolerance analysis of one-wire and two-wire EXCLUSIVE-OR-equivalence matrix circuits was required. The tolerance analysis has been accomplished, and the parity adder drawing is being revised. The

calculations performed on the matrix circuits will be written down as a file report rather than on the parity adder drawing.

(John L. Muerle)

3. Auxiliary Storage

Magnetic Tape

Magnetic tape testing was continued on the FR300 tape unit. It was found that the dropout performance of 3M-159 tape was approximately equivalent to the performance of Ampex C1 tape. The tape lasted between 800 and 1000 passes over the head before one permanent dropout occurred. These tests used four tracks and 1200 foot tapes. 3M-199 and 3M-8923 long wear digital tapes will be tested.

(C. N. Liu)

The study of the relative merits of various tape recording formats continues. An attempt is being made to find more efficient single-error-correcting, double-error-detecting codes guaranteeing three ones on each half of the tape.

(R. L. Cummins)

Representatives of Ampex Corporation made several modifications and adjustments to our FR300 magnetic tape unit in November. These included replacement of left vacuum chamber, two reel servo motors, two pinch rollers and brake assemblies, and other parts. New tape arm shoes were installed, and the system was completely aligned.

(M. D. Freedman)

During the month, it was decided that the December, 1961 version of the new computer will not necessarily contain a magnetic tape memory. Magnetic tape will be added after December, 1961, as scheduling permits:

This decision is based on the following considerations:

1. Scheduling problems make it difficult to build both magnetic tape and magnetic drum memories by December, 1961.
2. If only one of these memories can be built, the magnetic drum is preferable because it has the faster data rate.

3. The magnetic tape equipments which are available now do not produce the data rate we desire. However, equipments under development by several manufacturers (Ampex TM2, Potter 908, etc.) have faster data rates. These new models are expected to reach production in 1961.
4. Magnetic drums which will meet our requirements are available now.

The theoretical study of methods and formats of recording will continue, but there will be no further procurement or construction of magnetic tape equipment.

(H. C. Brearley)

Magnetic Drum

Negotiations for the purchase of a 3.5 million bit magnetic drum memory continue. As of the end of November, we had received proposals and quotes from four manufacturers, a proposal without a quote from one, and detailed comments on our requirements from two more.

(H. C. Brearley)

The trial design of the magnetic drum system continues. The following assumptions are being made, in addition to the assumptions reported last month.

1. The drum system will deal with 14 bit characters (13 bits plus parity). The parity bit will be generated during the write operation and checked during read. A single 14 bit register will be used for both input and output.
2. A drum address register will be provided to hold the address of the block during an operation.
3. Access to a drum block will be by temporal selection of 1 of 8 sectors and by spatial selection of 1 of 32 bands. It is assumed that common spatial selection equipment can be used for both write and read. A literature search on spatial selection methods is being made.
4. An error correction scheme which exploits the redundant properties of NRZ recording is being planned, similar to the scheme used on ILLIAC, but using simpler circuitry.

A report (File 347) describing the ILLIAC drum was prepared, based on lectures given by Professor J. E. Robertson.

(P. V. S. Rao)

A study of write and read amplifiers for the magnetic drum was begun.

(H. Yazaki)

4. Paper Tape I/O

After general discussion of the available paper tape punches it appeared that the most sensible choice would be a Teletype BPRE 120 cps. punch, at least for the initial stages of machine checking and use. Lack of sufficient detailed information has hampered a definite choice of paper tape reader. The most promising candidate is the Elliott reader (1000 cps) and it is proposed that one be borrowed from the agents for study. In view of the uncertainty about readers, it is proposed that CSL investigate the modification of an existing ILLIAC reader for 8-hole tape. If neither the Elliott nor the ILLIAC reader can be developed for satisfactory 8-hole operation in time, it is proposed as a last resort to use 5-hole tape and existing ILLIAC equipment.

Paper Tape Editing

A suggested specification for a paper tape editing station has been circulated (File No. 352, November 29, 1960) and as a result of the discussion of this file, an amended keyboard description has been drawn up, and other minor modifications made. A promising source of editing equipment seems to be Tally. They make a range of editing stations, including their own readers and punches (60 or 120 cps, with reel transports, readers reversible), IBM typewriters, their own keyboards, and provision for a second reader with verification facilities. I have had a brief look at the readers and punches, which seem simple, well made, and quite convenient in use. The keyboards can be assembled out of modules, apparently to any specifications. Rough price of a two-reader station, with verification facilities, and automatic case-shifting keyboard is around $5,000.00.

In-Out Buffering

A proposal for a system with two words of core buffering for each channel (in and out) has been circulated (File No. 351, November 18, 1960).

(C. S. Wallace and personnel of
Coordinated Science Laboratory)

5. Slow Circuits

A test unit was built consisting of level restorer-inverter circuits and NOT circuits. All transistors (N-100's) in this chassis were tested beforehand for $|Veb_r| \geqslant 5v$, $|Vcb_r| \geqslant 30$ v. and $\alpha_{DC} \geqslant 0.98$. Some of the effects of transistor aging will be investigated.

Investigation is being made into emitter-follower transient base currents as a function of the load for single-ended and complementary pair emitter-followers.

(L. J. Peek, Jr.)

6. Main Arithmetic Unit (MAU)

The logical design of the MAU end connections was completed, except for minor alterations, and drawn up for layout. The voltage levels into each element, the output fanout and level shifts were also computed, and bumps inserted where necessary. A set of piecewise linear approximations to the level-shift curves for non-restoring logic was obtained and used to simplify the checking. Some of the F-elements and selectors were re-designed to make the voltage levels compatible with other circuits.

(H. Aiso, M. Faiman, J. O Penhollow,
G. Krabbe, and H. Lopeman)

A preliminary report on the MAU end connections was prepared. The Boolean equations appear under one cover with notes and cross references. The notation used conforms with that shown in the MAU end connection drawings and in the modified version of the control sequences. (See below)

(J. O. Penhollow)

In the course of checking the end connections from the point of view of Boolean equations and their equivalent logical diagrams, certain errors were corrected, and certain simplifications were made. Certain other simplifications, involving a smaller total number of transistors, were not adopted because the amount of work which would have had to be re-done did not seem justified.

(R. R. Shively)

7. Exponent Arithmetic Unit (EAU)

The logical diagram for the EAU was drawn including registers, selectors and the E-adder (called D). Design was begun on logic attached to

the output of D, and a register at the output of this logic. Apart from this logic and the register of status flip-flops the EAU is now designed.

(J. O. Penhollow, M. Faiman)

8. Flow Charts for Arithmetic Control

A new set of flow charts was produced for all instructions except division, incorporating changes in strategy resulting from speed-independent design rules and more information on speed and complexity. Two new logical instructions "Double AQ" and "Double A" were added, and arithmetic shifts were eliminated. (These can be obtained by the use of 2 other instructions instead). These charts have not been corrected and the first step "decode" of executing each instruction has not been completely specified.

(D. B. Gillies)

9. Speed-Independent Design

It has been decided that the sequencing logic of the arithmetic control will be logically designed in a speed-independent manner. In order that the design efforts of the various people involved shall be reasonably consistent, work has started on a set of basic logical diagrams which will present a speed-independent solution to a logical design. The design problems will be presented in the form of the flow diagrams used to describe the various steps in an arithmetic operation. It is envisioned that this set of logical diagrams will be enlarged and amended as the flow charts are revised and the logical design philosophy is changed. These basic logical diagrams were used in assisting with the logical design of the checkout control which will be used to prove out sections of the MAU as they are built.

During the month an estimate was made of the number of components anticipated in the arithmetic control. Using the aforementioned basic logical diagrams and the flow charts available it was determined that the arithmetic control will include approximately 6300 transistors. This figure includes the sequencing logic for the arithmetic operations, the logic to control all the MAU and EAU selectors, the entire EAU as well as some of the transistors in the gating controls.

(R. E. Swartwout)

PART II

CIRCUIT RESEARCH PROGRAM

(Supported in part by the Office of Naval Research under Contract Nonr-1834(15).)

1. Introduction:

H. Guckel and R. Crow spent the month of November completing the report on the flow-gating system. This report comprises sections on general switching theory, the theory of flow-gating, the design procedure, the circuit tests and finally the systems tests. K. Batcher has started investigating the possibility of a 200 mc transistorized clock to be used with the low swing transistor system studied by C. Afuso.

2. Flow Gating Systems Tests

A) Read in Test - In order to obtain information regarding the minimum read-in time of the flow-flop register a ring-propagation test, as shown in Figure 1, was performed.

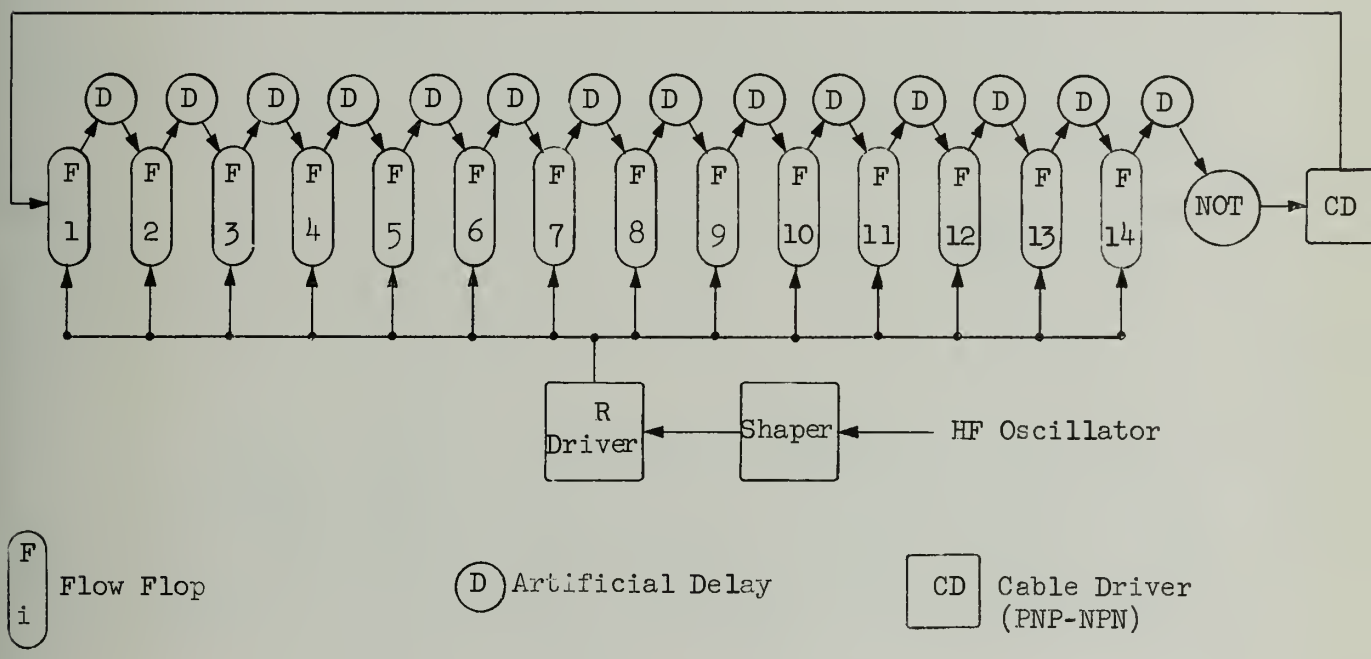

Figure 1 - Ring Propagation Test

The delay elements are necessary for correct timing relationships. The pulse length applied to the driver was adjusted so that the pattern would advance by a single position. In this way a critical driver pulse length was found. The repetition rate used was 7 mc.

B) Dynamical Design Evaluation - The test was performed as in Figure 1. The critical pulse length was evaluated for different power supply tolerances. The results are shown in Figure 2.

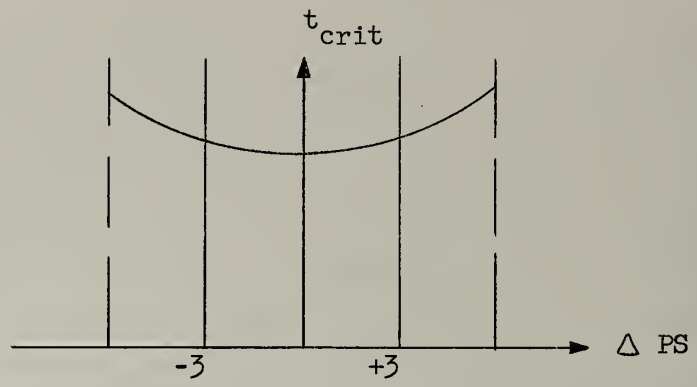

Figure 2 - Supply Voltage Drift vs. Critical Time

Here ΔPS is defined as the percentage deviation of all supplies from their normal magnitude. Since the read-in pulse length shows a minimum at zero deviation, it may be concluded that the system is dynamically optimized.

From the results of tests A and B the "safe pulse length" was determined. With appropriate safety factors this length is 88 mμsec measured at the ground reference.

C) Read Out Test

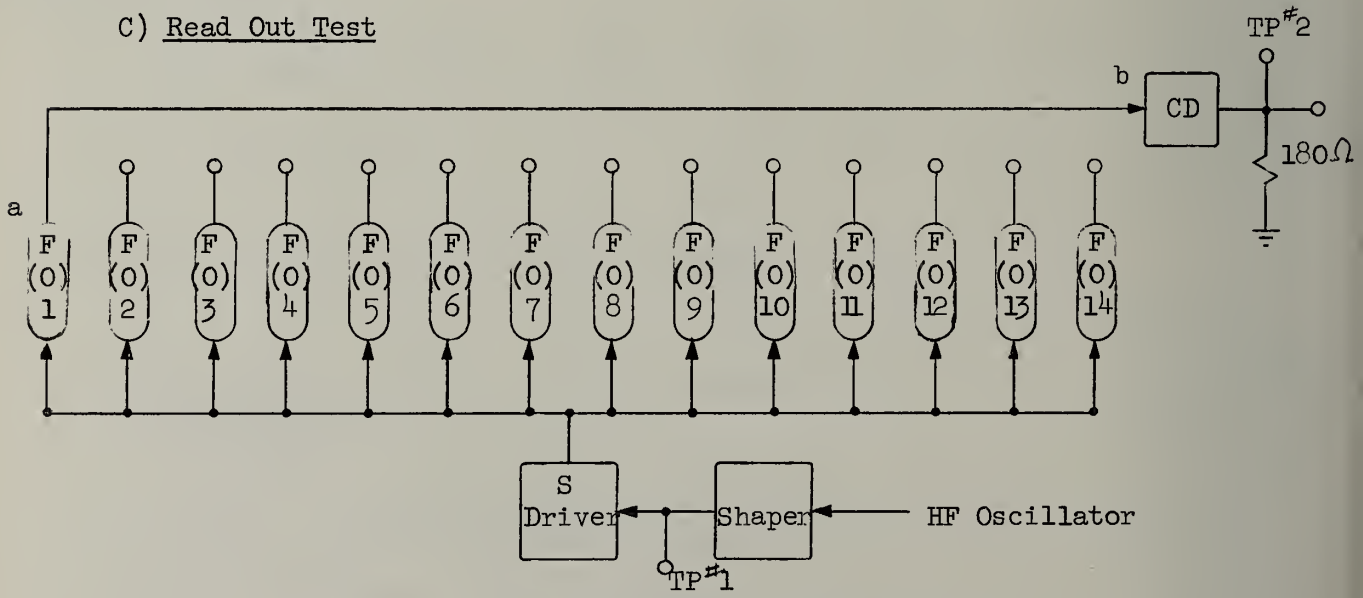

Figure 3 - Read Out Test

In Figure 3 the worst case load is simulated for the S-driver. The wire ab was taken as three feet, 1.5" above chassis plane. The 180 ohm load

simulates the worst case resistive load for the output bus. The test was used to determine the delay between the input of the S-driver and the correct output. (Delay TP#1 - TP#2). Measured at the ground reference this delay is, after application of safety factor, less than 80 mμsec.

The three above tests are considered as the most important ones. However, several other tests were conducted in order to test individual circuits. Those tests which concern themselves with error frequency, etc., could not be performed due to lack of facilities. It is hoped that some of these can be evaluated in the test unit.

3. Two-Wire Low Swing Circuits

3.1 Exclusive OR - A two input Exclusive-OR circuit as shown in Figure 4 was designed and tested.

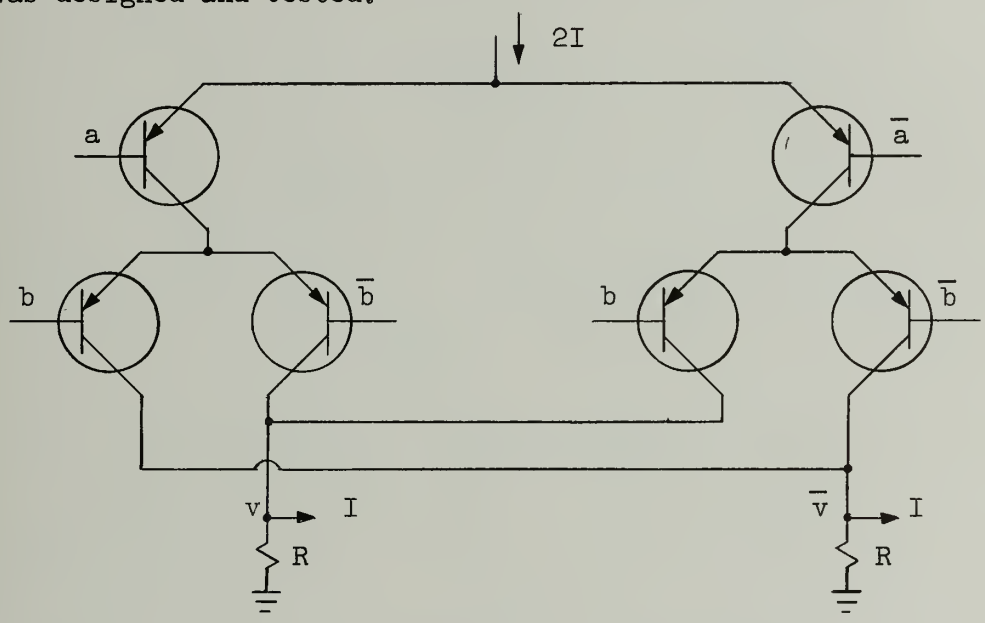

Figure 4 - Exclusive OR

Let a higher base potential signify "1" and a lower base potential "0". Then for the combination of inputs, shown in the Table, the outputs v and $\bar{v}$ are as follows:

a	b	v	$\bar{v}$
1	1	-RI	RI
1	0	RI	-RI
0	1	RI	-RI
0	0	-RI	RI

Letting RI → "1", -RI → "0", v visibly represents the Exclusive-OR of a and b.

Since the current goes through two transistors in series, the delay time is about 6 mμsec, the same as that for an AND circuit having a similar configuration.

If AND and OR circuits are used to obtain the Exclusive-OR, twelve transistors are required and speedwise nothing would be gained.

3.2 Flip-flop - The circuit is shown in Figure 5. A setting time of 3.5 mμsec was observed. Since the feedback path contains two collectors, this time cannot be reduced to less than two collector delays. However, there are the following advantages:

(i) The output is completely separated from the input.

(ii) Since each collector load can be chosen independently of the other, the flip-flop is fairly easy to gate.

3.3 C-element - The circuit is shown in Figure 6. (I) is the driving circuit and (II) is the flip-flop part. The driving part sets on the flip-flop only when both inputs, a and b agree. Looking at the Table, it is easy to see that only the 00 and 11 input combinations produce a setting effect.

3.4 F-element Using C-element - The logical diagram is shown in Fig. 7.

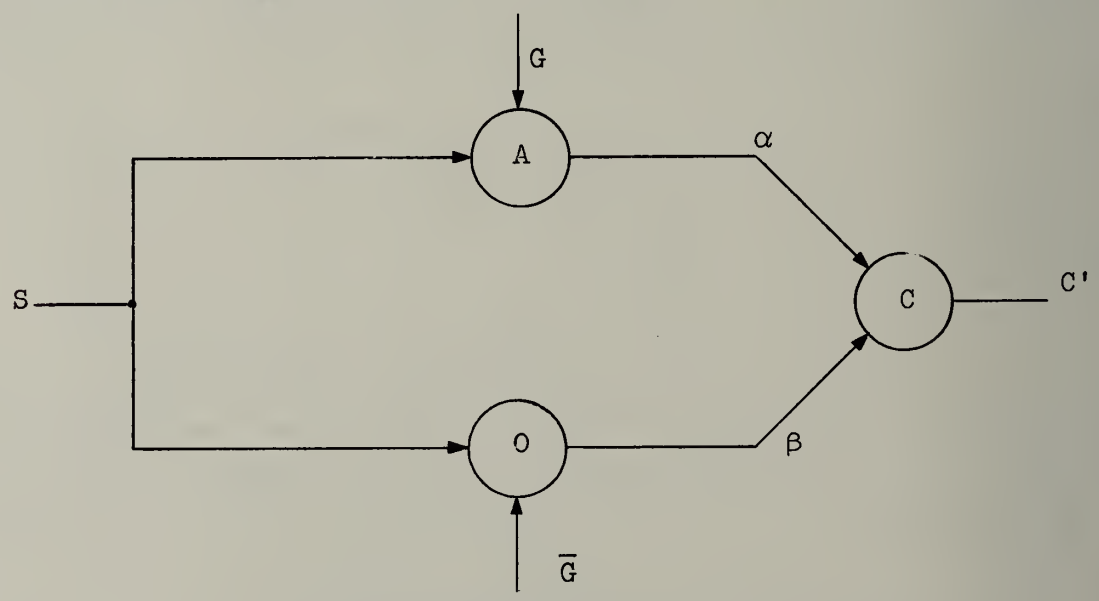

Figure 7
Logical Diagram of an F-element using a C-element

$\alpha = GS \qquad \beta = \overline{G} \vee S$

G	S	α	β	C'
1	0	0	0	0
1	1	1	1	1
0	0	0	1	C
0	1	0	1	C

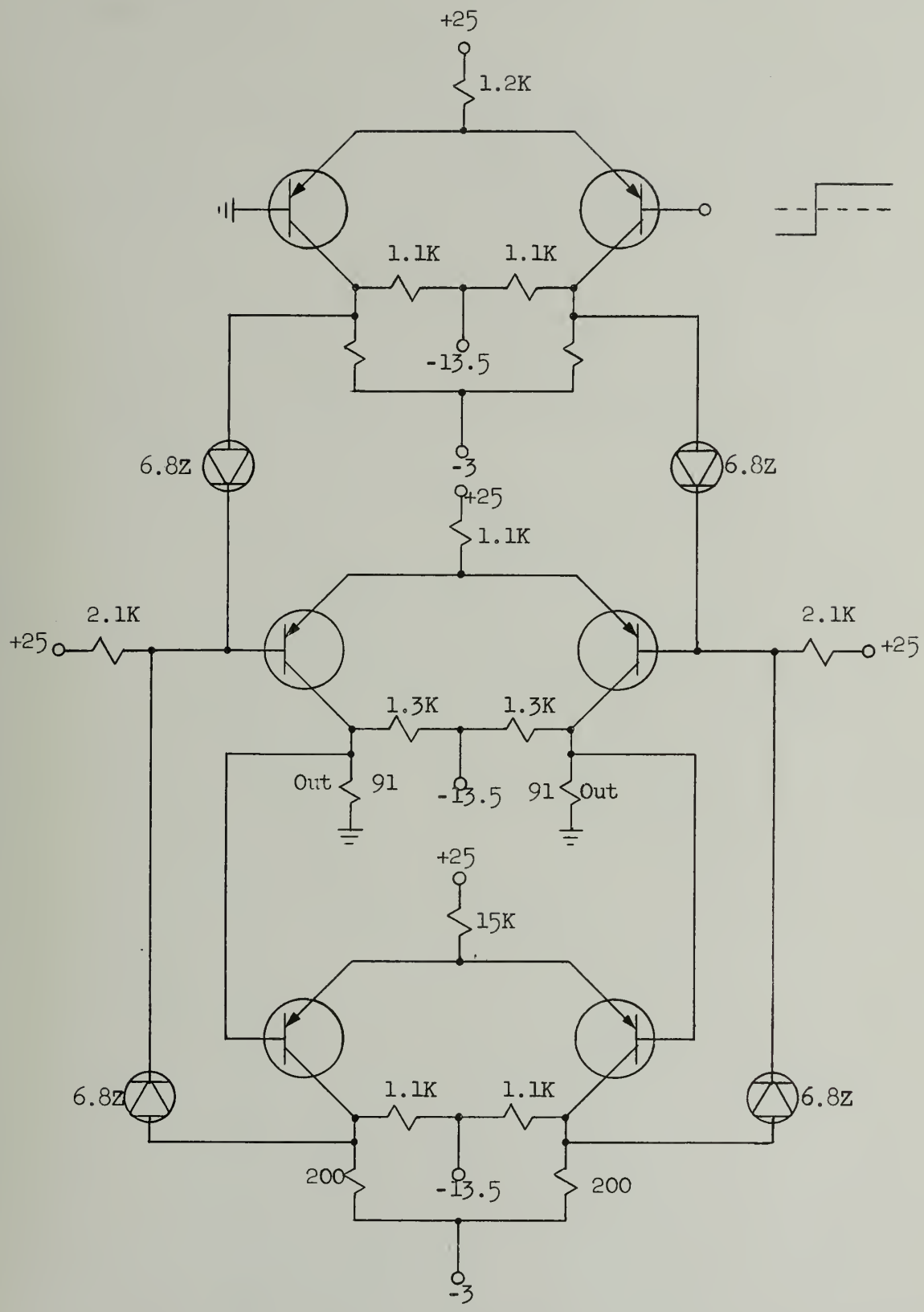

Figure 5 - Flip-flop

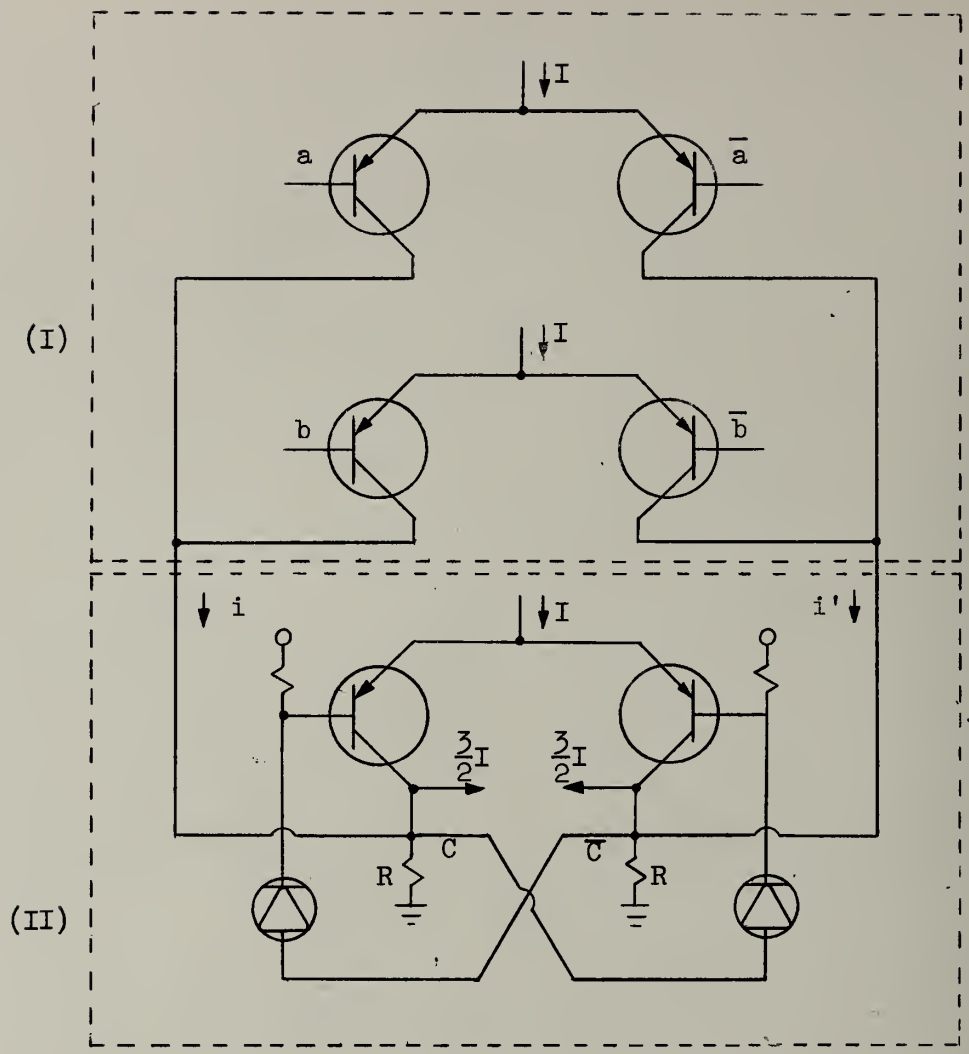

Figure 6 - C-element

a	b	i	i'	C'	$\bar{C}'$
0	0	2I	0	$-\frac{3}{2}IR$	$\frac{3}{2}IR$
0	1	I	I	C	$\bar{C}$
1	0	I	I	C	$\bar{C}$
1	1	0	2I	$\frac{3}{2}IR$	$-\frac{3}{2}IR$

ie - C' = ab $\sqrt{}$ac $\sqrt{}$bc

The transistor circuit is shown in Figure 8.

The experimental data has not been obtained yet.

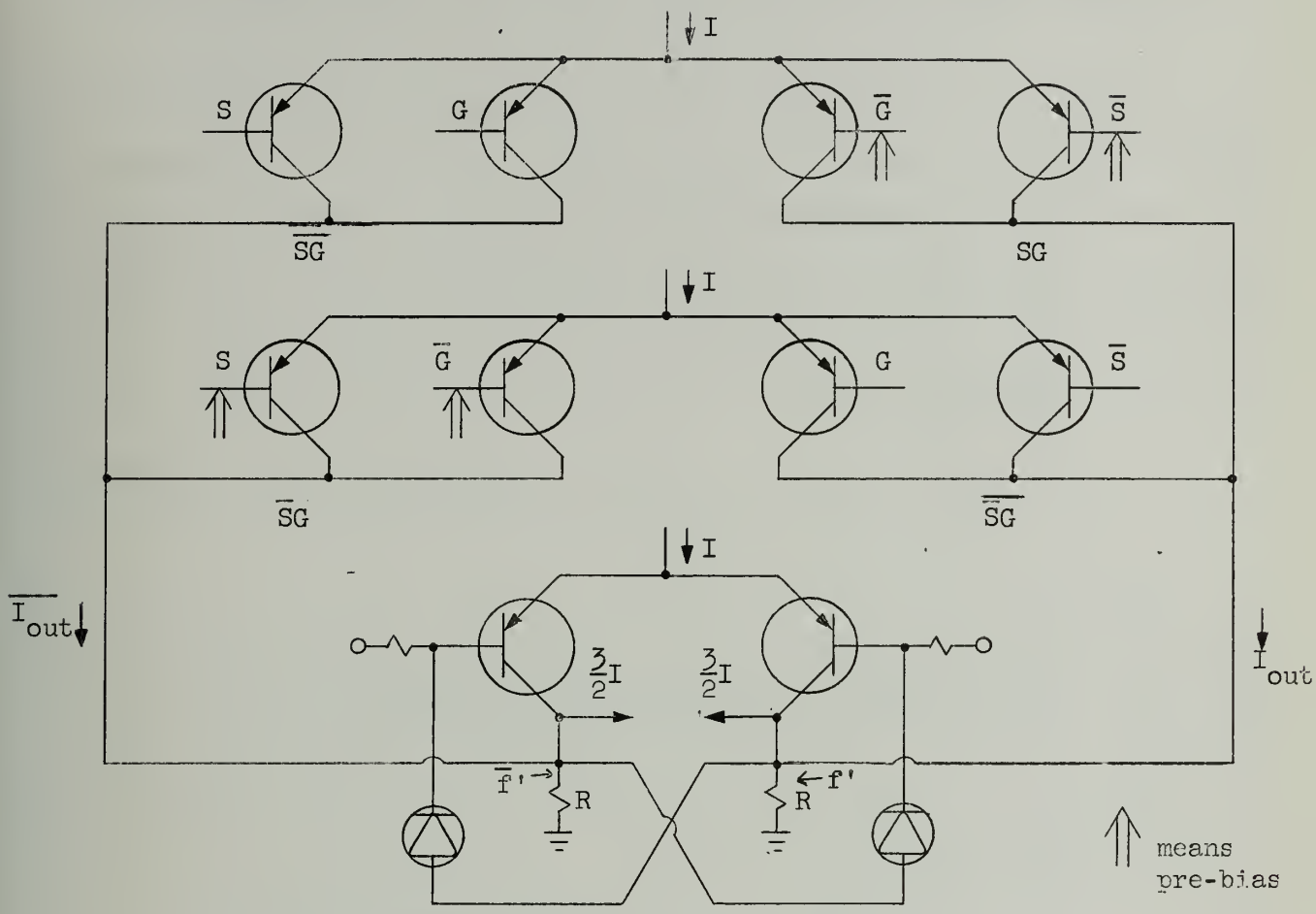

Figure 8 - F-element

G	S	I_{out}	$\overline{I_{out}}$	f'	$\overline{f}'$
1	1	2I	0	RI	-RI
1	0	0	2I	-RI	RI
0	1	I	I	f	$\overline{f}$
0	0	I	I	f	$\overline{f}$

PART III

MATHEMATICAL METHODS

1. Experiments With a Floating-Point Differential Equation Solver (Supported in part by the National Science Foundation under Grant G9503.)

The IBM 650, floating-point arithmetic program for solving differential equations using the fourth-order scheme called "Kutta's Simpsons Rule" and the binary ladder summation strategy (like that used in the quadrature problem described in the November 1959 Technical Progress Report) has been tested on three differential equations and the results of these tests are given in the table below. The three equations are:

1) $$\frac{d^2y}{dt^2} + \frac{1}{t}\frac{dy}{dt} + y = 0$$

initial conditions: $t = 1$, $y(1) = 0.76519769$, $y'(1) = -0.44005059$

2) $$\frac{dy}{dt} = y$$

initial conditions: $t = 1$, $y(1) = 2.7182818$

3) $$\frac{d^2y}{dt^2} + y = 0$$

initial conditions: $t = 0$, $y(0) = 0$, $y'(0) = 1$

For the first two equations we also display results "without binary ladder" which means that the binary ladder portion of the program was removed and the incrementing of the solution was performed in the direct way

$$y_{i+1} = y_i + \Delta y_i \cdot$$

For the first two equations we also display results obtained on an IBM 704 using the Gill-Kutta equations with double precision, floating-point arithmetic performed in the incrementing of the solution. (The IBM 704 results for the first equation were sent to us by R. F. King at the Argonne Laboratory. The IBM 704 results for the second equation were sent to us by B. Hargreaves of General Motors. The two IBM 704 programs differed slightly.) It is to be noted that double precision floating-point arithmetic on the IBM 650 is

	Number of Steps	Step Size	Correct Solution	650 With Binary Ladder	650 Without Binary Ladder	IBM 704
Eq. 1	100	.01	.22389078	.22389077	.22389082	.22389078
	500	.01	.15064526	.15064527	.15064516	.15064528
	900	.01	-.24593576	-.24593580	-.24593580	-.24593577
	200	.005	.22389078	.22389076	.22389072	.22389078
	1000	.005	.15064526	.15064529	.15064501	.15064528
	1800	.005	-.24593576	-.24593580	-.24593600	-.24593577
	64	1/64	.22389078	.22389077	.22389079	.22389079
	320	1/64	.15064526	.15064526	.15064516	.15064526
	576	1/64	-.24593576	-.24593580	-.24593540	-.24593577
Eq. 2	100	.01	$.73890561 \times 10^{1}$	$.73890560 \times 10^{1}$	$.73890558 \times 10^{1}$	$.73890558 \times 10^{1}$
	500	.01	$.40342879 \times 10^{3}$	$.40342881 \times 10^{3}$	$.40342836 \times 10^{3}$	$.40342874 \times 10^{3}$
	900	.01	$.22026466 \times 10^{5}$	$.22026470 \times 10^{5}$	$.22026450 \times 10^{5}$	$.22026462 \times 10^{5}$
	200	.005	$.73890561 \times 10^{1}$	$.73890560 \times 10^{1}$	$.73890551 \times 10^{1}$	$.73890558 \times 10^{1}$
	1000	.005	$.40342879 \times 10^{3}$	$.40342883 \times 10^{3}$	$.40342936 \times 10^{3}$	$.40342875 \times 10^{3}$
	1800	.005	$.22026466 \times 10^{5}$	$.22026471 \times 10^{5}$	$.22026483 \times 10^{5}$	$.22026462 \times 10^{5}$
	64	1/64	$.73890561 \times 10^{1}$	$.73890560 \times 10^{1}$	$.73890550 \times 10^{1}$	
	320	1/64	$.40342879 \times 10^{3}$	$.40342880 \times 10^{3}$	$.40342853 \times 10^{3}$	
	576	1/64	$.22026466 \times 10^{5}$	$.22026466 \times 10^{5}$	$.22026436 \times 10^{5}$	
Eq. 3	50	$\pi/10$	0	$.12295667 \times 10^{-3}$	← y = sin	
			-1	-.99966970	← y' = cos	
	100	$\pi/20$	0	$.78116667 \times 10^{-5}$	← y = sin	
			-1	-.99998970	← y' = cos	

almost prohibited because the floating add instruction includes normalization and round-off with loss of the least significant part of the smaller of the two numbers added. It is possible to recover the part that was lost by doing additional arithmetic (e.g., do $(y_i + \Delta y_i) - y_i$ to get a correction term) and a program following these ideas is under consideration.

The IBM 650, floating-point, differential equation solver which uses the binary ladder summation scheme is being submitted for inclusion in our program library. A faster but less accurate version, which omits the binary ladder, is also being submitted to the library.

(L. D. Fosdick and C. Wilmot)

PART IV

SWITCHING CIRCUIT THEORY

(Supported in part by the Office of Naval Research under Contract Nonr-1834(27).)

A simplification technique for Boolean functions has been developed which is an extension of the standard simplification methods used with OR-polynomials. It has been recognized for many years that different results may be obtained by using dual OR-polynomials, and often both simplifications processes are followed so the better result may be chosen. Not generally realized, however, is the fact that the switch-over from OR-polynomial to its dual or back may be readily performed on any subset of terms. Although no set criterion has been found for determining when to perform such a switch, the extra freedom permits one to avoid exhaustive "branching" in many cases in which standard methods involve such "branching".

(D. E. Muller)

Estimates of the maximum number of prime implicants (or elementary cocycles) in Booleans functions of N variables have been made. For varying N from 1 to 12 the estimates are 1,2,6,13,32,92,218,576,1698, 4300,11770, and 34914.

The formula for calculating these estimates K_N can be expressed as follows:

$$K_N = \frac{N!}{Q!^3 (Q+1)^R} + \sum_{i=1} \frac{N!}{(N-Q_{i-1}+2)!(Q_i!)^2 (Q_i+1)^{R_i}}$$

$$+ \sum_{i=1} \frac{N!}{(N-S_{i-1}+2)!(S_i!)^2 (S_i+1)^{T_i}}$$

where: (1) Q and R are the quotient and remainder obtained when N is divided by 3.

(2) Q_0 and S_0 are defined as:

$$Q_0 = \begin{cases} Q & \text{if } R = 0 \\ Q & \text{if } R = 1 \\ Q+1 & \text{if } R = 2 \end{cases}$$

$$S_0 = \begin{cases} Q & \text{if } R = 0 \\ Q+1 & \text{if } R = 1 \\ Q+1 & \text{if } R = 2 \end{cases}$$

(3) Q_{i+1} and R_{i+1} are the quotient and remainder obtained when $Q_i - 2$ is divided by two, and

S_{i+1} and T_{i+1} are the quotient and remainder obtained when $S_i - 2$ is divided by two.

The estimates are based on a sequence of Boolean functions and hence K_N constitutes a lower bound for the maximum number of prime implicants. Thus if M is the maximum number of prime implicants, it is easily shown that:

$$K_N \leqslant M < 3^N$$

(D. E. Muller and R. E. Miller)

A formal algebra for linear graphs has been constructed using the following rules. If a graph G is defined by a set $\mathcal{O}(G)$ of nodes and a set $\lambda(G)$ of unordered pairs of distinct nodes, called branches, then define the sum of two graph G and H by

$$\mathcal{O}(G + H) = \mathcal{O}(G) \vee \mathcal{O}(H)$$
$$\lambda(G + H) = \lambda(G) \vee \lambda(H)$$

If the complement G' of G is defined by $\mathcal{O}(G') = \mathcal{O}(G)$, and $\lambda(G')$ = the set of all unordered pairs of nodes in $\mathcal{O}(G)$ which are not pairs in $\lambda(G)$, then we may take as the product of G and H the graph defined by $GH = (G' + H')'$. Yet a fourth operation may be provided which yields graphs not obtainable from those previously defined. It is given by: $\mathcal{O}(G * H) = \mathcal{O}(G) \vee \mathcal{O}(H)$, $\lambda(G * H)$ = set of all branches in $\lambda(G)$ or $\lambda(H)$ such that at least one node

in the pair lies in the intersection of $\mathcal{G}(G)$ and $\mathcal{G}(H)$.

Various algebraic rules have been derived for manipulation of expressions involving these operations.

(D. E. Muller and R. E. Miller)

A technique for obtaining all maximum nodal normal subgraphs (MNSG's) of a linear graph was developed which assumes that the set of all maximum complete subgraphs (MCSG's) of the graph are given. A technique for obtaining the MCSG's had been developed previously, and this new technique can be used, following the MCSG determination, to obtain all the MNSG's of the graph. This latter method can be used in a more general sense either to obtain a nodal normal subgraph representation of a graph from a complete subgraph representation of the graph, or inversely.

(R. E. Miller and D. E. Muller)

PART V

DATA REDUCTION METHODS

(Supported in part by the National Science Foundation Under Grant G9503)

AUTOMATIC REDUCTION OF DATA FROM BUBBLE CHAMBER PHOTOGRAPHS

The digital encoding of a bubble chamber photograph and the following of a track on a digital mesh have been briefly described in the September and October Monthly Reports. Before this tracking procedure can begin, an appropriate initiation point on a track must be provided. Another phase of the simulation programs being studied (the gestalt routines) consists of an attempt to automatically seek out at least one uncluttered initiation point on each track.

The basic tool of the gestalt routine is the association map, where the original digital mesh is reduced eight-fold in both the X and in the Y coordinate by assigning one bit to each local square (eight by eight) of the original digital mesh. For example, in our simulation studies, the 512 x 512 digital mesh of the original bubble chamber negative is reduced to a 64 x 64 association map (or A-map, as we shall it). In general, there is not one A-map, there are many. For example, the yes-no encoding of the local eight by eight grid can depend upon the number of ones, the number of zero-one pairs, the match to one of several prescribed patterns, or combinations of these qualities. In general, the encoding of the eight by eight grid can be made dependent upon neighboring grids. For example, the threshold that is used with the count might be made dependent upon the pattern of the eight nearest neighbors on some prior A-map.

The gestalt routine must make use of other tools as well. For example, we can throw small electron spirals onto a sixty-four by sixty-four (this being the average size of such a spiral) local grid and classify largely by zero-one pair counts--these give a measure of the ribbon length of the spiral. In general, the gestalt routine is the least understood and therefore most speculative aspect of the automatic program.

We see a natural evolution of the gestalt routine as follows: the fine, or full, resolution digital mesh of the original bubble chamber negatives feeds in parallel a stack of distinct digital association maps--normally one eight by eight micro-gird of the original mesh feeding one

point of each reduced map. These maps can be considered as stacked upon one another as successive floors of a multi-layer building. For example, one map might emphasize the boundaries of the chamber, another the region of high density of electron spirals, a third, points of good quality for the initiation of tracking, a fourth, tracks already recorded and understood. We see, then, the control routine as running logical skewers vertically from floor to floor to evaluate new tracing tactics, or over-all reduction strategy.

An A-map can be made using only the relative number of zeros and ones within the 8 x 8 cell followed by an examination of nearest neighboring cells on the A-map. The admissable patterns of neighboring cells used simulated a straight line track segment. It is not anticipated that all initiation points can be thus found. Reliability of the program, however, dictates that easily recognized tracks be recognized, tracked first and catalogued.

Another alternative is an A-map made using the count of horizontal zero-one pairs within the basic 8 x 8 cell. Beam tracks, though very weak in the original digital "script", are emphasized by this technique.

A-maps have also been made by insisting upon (1) a high zero-one count, and (2) a high one count, that is, discrimination toward the type of cells associated with tight electron spirals. The points of such a map can be matched 1-1 with these confused areas of the original "script".

(K. Hillstrom, B. McCormick, S. Penny*,
J. Snyder)

*Mr. Penny left the Digital Computer Laboratory in June, 1960 and is now a staff member of the Radiation Laboratory at the University of California Berkeley, California.

PART VI

ILLIAC USE AND OPERATION

New Illiac Codes

During the month of November, no new routines were added to the Illiac Library.

Illiac Programming

An inversion routine for a symmetric matrix has been written for Illiac. By taking advantage of the symmetry, the input, the output, and the calculation sections are faster than existing library routines. In addition, the capacity has been increased so that matrices of order up to 136 can be accommodated. The inversion routine will be prepared in two forms, as a complete program and as a closed subroutine. Written instructions will be prepared during the next month and placed in the library.

(F. Shimamoto, K. Dickman)

ALGOL

During July, 1960, Professor Herman Bottenbruch of Damstadt University spent several weeks in this Laboratory, lecturing on Algol and consulting with various staff members on this subject. A report bearing on this visit is under preparation and will be available.

A new section of the Communications of the Association for Computing Machinery has recently been created for the publication of and wide dissemination of routines written in Algol. Over the past several months since the inception of this new section, approximately 30 routines have been published.

The Illiac Library is one of the largest and one of the best documented libraries in existence. However, having been prepared for a one-of-a-kind computer, this library has not been widely available. Currently, some of the more unique programs in the library and some of the more standard procedures which have been neglected by previous publications in the aforementioned journal are being considered for translation into Algol language and publication. These studies will be continuing during the coming year.

(M. Raff, K. Dickman)

Illiac Usage

During the month of November, specifications were presented for 22 new problems. This list does not indicate how the Illiac was used because large amounts of machine time may have been consumed by problems with numbers less than 1802T. Numbers followed by T are for theses.

1802T Agricultural Economics. Land Value Analysis. The land value index is to be studied as a function of several independent variables, such as population index, national income index, technology index, demand for land, land available, food consumption index, etc. United States historical statistics will be used to study this relationship for various time periods. An attempt will be made to construct an estimation equation which will forecast future land value levels in terms of the various pertinent indices.

1803T Theoretical and Applied Mechanics. Approximate Conformal Mapping to Determine Stress Concentration. An integral equation for the transformation of a simply connected region made up of straight lines and circles in the z plane into a unit circle in the ζ plane is to be investigated.

The arc length in the z plane is to be related to the argument θ in the φ plane by solving the set of linear simultaneous equations of the following form

$$\theta(z_i)\left[1-\lambda(z_i)\right] - \sum_{j=1}^{80} \Delta S_j K(z_i, z_j)\left[\theta(z_j) - \theta(z_i)\right] = -2\beta(z_i).$$

z_i and z_j represent discrete points on the contour of the section in the z plane. S_j represent arc length measured from z_1 in a counter-clockwise direction around the countour L. $\beta(z_i)$ is the angle that the line segment $z_0 z_1$ subtends at the point z_i, the angle being read from z_0 to z_1.

$$K(z_i, z_j) = \frac{1}{\pi} \frac{\cos(M_t, r)}{r},$$

where r is the distance between points z_i and z_j and (M_t, r) is the angle at the point z_j between the interior normal M_t to the contour L and r, the angle being read from M_t to r. If 80 discrete points are taken on the contour, 80 linear simultaneous equations with the terms 6400 $K(z_i, z_j)$, $80\lambda(z_i)$, 80 $\beta(z_i)$

must be solved. One program will be written to solve for the coefficients and an existing subroutine will be used for the simultaneous equations.

After the θ's have been obtained, the relation

$$x = \sum_{r=0}^{n} A_r \cos r\theta \qquad r = 1, 3, 5 \ldots n$$

will be used to calculate A_r. The A_r's will then be used in the expression

$$z = \sum_{r=0}^{n} A_r \zeta^r$$

which is an approximate polynomial mapping function.

1804T Horticulture. Absorption of Potassium and Calcium by Apple Trees. Illiac will be used for analysis of variance of the data and to obtain single degree of freedom comparisons.

The research problem is concerned with the absorption and utilization by apple trees of varying levels of the nutrients, potassium and calcium. A factorial arrangement of high, medium and low levels of potassium and high, medium and low levels of calcium applied to the trees make up the treatments. This arrangement was conducted at three different greenhouse temperatures to see what effects temperature has on the uptake and use of the two nutrients. In addition to the utilization of the nutrients by the plant as a whole, information on the use by various parts of the plant is desired. Thus, measurements were taken on the roots, stems (at several points), and bark at several times. The latter was to see if utilization by the various parts changes as the trees get older.

1805 Economics. Parameter Estimates under Specific Errors. A sufficient quantity of data has been analyzed to permit the publication of an article in a study of the properties of estimating parameters for systems of simultaneous equations when specification errors are present in the data.

Another analysis of data constructed to duplicate the interwar years 1920-1944 for the improvement of parameter estimates which are bad due to high autocorrelation within the data is being undertaken. Systems of difference

equations will be used to make transformations in the data before estimates are obtained by using K-5 to obtain autocorrelation coefficients for various lags of the variables. These correlation coefficients are then used to obtain parameters in the difference equations.

The transformed data is then used with programs for estimating parameters, limited information maximum likelihood, least quares and two stage least squares. The sign test is used to determine which methods are better and finally, estimates of shocks and autocorrelation coefficients are computed to see what autocorrelation remains after the estimates are made.

1806 Digital Computer Laboratory. Solution of Non-Linear Circuit Equations. This problem is a study of methods for improving the convergence of an iterative process used for solving non-linear circuit equations. The iterative process which is used has been described previously. Briefly, it consists of successive corrections made to the node voltages based on the solution of linearized circuit equations while neglecting the off-diagonal terms in these equations.

1807T Physics. Efficiency for π^+ Photoproduction Near Threshold. Presently, this program determines the fraction of a π^+ mesons stopped in a hydrogen target surrounded by a carbon absorber. This is done by using a Monte Carlo method. Mesons are produced uniformly in a cylinder of hydrogen (with their positions randomly assigned) and then the known dynamics and range energy relations are applied to see if they stop within the target.

In the future, a similar part will be added to include the detecting counter.

1808T Civil Engineering. Distribution of Wheel Loads on Multi-Beam Bridges. The problem consists of determining what proportion of the total bending moment produced by a concentrated load in a span is resisted by the different beam elements of multi-beam bridges. This requires the calculation of three reaction components q_j, r_j and s_j at each joint by solving a set of 3(N-1) simultaneous equations where N is the total number of elements. Such equations written for all joints give the necessary number of equations to give all reaction components.

The coefficients in these equations depend upon section properties, bridge proportions, and load position. These coefficients are to be computed in each case from a set of given dimensionless parameters (based upon the variables enumerated above) before generating and solving the equations. Then the equations will be generated and solved.

1809 Electrical Engineering. Antenna Pattern in Magneto-Ionic Medium. The problem is to calculate the near and far fields of an antenna placed in a magneto-ionic medium such as the ionosphere, for various parameters such as the plasma frequency, the signal frequency, and the collision frequency.

For the far field, the method involves the solution of a trancendental equation as a preliminary step to the computation of the field expressions. Once the solution of the transcendental equation is known, the field patterns may be calculated through the use of expressions derived on the basis of saddle-point integration.

For the near field calculation direct integration methods have to be used. The integrand contains Bessel, Neumann and exponential functions.

In both of these cases, the calculations are to be repeated a large number of times for various changes of parameters.

1810 Psychology. Extension Analyses in Factor Analytical Personality Research. Since the usual factor analytical techniques when using the Illiac computer are possible only up to a number of 111 variables, studies with more than this number of variables have to be divided; usually, the most important 111 variables are submitted to the original factor analysis and the remaining variables are treated in the so-called extension analysis. In this study, some extension analyses shall be performed which make no use of the usual factor estimation procedure but try to estimate the reference vector correlations of the extension variables by separate factor extraction procedures for each extension analysis and these reference vector structures afterwards will be rotated into the original reference vector space by using marker variables.

Since this technique would be shorter and more accurate, this study possesses also some experimental interest regarding the use of the Illiac computer in this special problem of factor analysis.

1811 Psychology. Multi-Variant Analysis of Temperament and Perception. This is in essence a double problem. The first concerns specific studies on dimensions of personality, using factor analytic techniques. The second concerns dimension of perception in relation to certain personality structures. Since the studies are theoretically linked, and involve the same technique--namely, factor analysis--they are handled together.

1812 Psychology. Dimensions of Preference. Systematic knowledge of the preferences and values characteristic of individuals within groups and populations is highly important to many endeavors, both in social sciences and in business. In this project, a double-sided problem will be considered from a theoretical position; first, to describe the preferences of individuals, and, second, to accomplish this description in a systematic manner so as to reveal relations among the preferences of individuals. A new factor analysis technique involving double centered score matrices will be investigated as a possible solution.

The means, variance, covariance and intercorrelations for the trial data will be obtained. The characteristic roots and vectors and the principal axis solution are also to be obtained.

1813 State Water Survey. Image Force Between Spherical Conductors. The calculation of the attractive force between two spherical conductors is a basic factor for the further computation of collision coefficient between two water drops in the atmosphere. The collision is an important process in cloud physics. The equation for the force by the image method is as follows, according to Thompson:

$$F = \frac{2q_1 q_2}{ab} \sum_{i=1}^{\infty} \frac{S'_i}{S_i^2} - \frac{q_1^2}{a^2} \sum_{i=1}^{\infty} \frac{P'^i}{P_i^2} - \frac{q_2^2}{b^2} \sum_{i=1}^{\infty} \frac{Q'_i}{Q_i^2}$$

where $$\begin{Bmatrix} P_{n+1} \\ Q_{n+1} \\ S_{n+1} \end{Bmatrix} = \left(\frac{c^2-a^2-b^2}{ab}\right) \begin{Bmatrix} P_n \\ Q_n \\ S_n \end{Bmatrix} - \begin{Bmatrix} P_{n-1} \\ Q_{n-1} \\ S_{n-1} \end{Bmatrix}, \quad \begin{matrix} P_0 = \frac{1}{b}, & Q_0 = \frac{1}{a}, & S_0 = 0 \\ P_1 = \frac{1}{a}, & Q_1 = \frac{1}{b}, & S_1 = \frac{c}{ab} \end{matrix}$$

$$\begin{Bmatrix} P'_{n+1} \\ Q'_{n+1} \\ S'_{n+1} \end{Bmatrix} = \left(\frac{c^2-a^2-b^2}{ab}\right) \begin{Bmatrix} P'_n \\ Q'_n \\ S'_n \end{Bmatrix} - \begin{Bmatrix} P'_{n-1} \\ Q'_{n-1} \\ S'_{n-1} \end{Bmatrix} + \left(\frac{c}{ab}\right) \begin{Bmatrix} P_n \\ Q_n \\ S_n \end{Bmatrix},$$

$$P'_0 = 0,\ Q'_0 = 0,\ S'_0 = 0$$

$$P'_1 = 0,\ Q'_1 = \frac{1}{b},\ S'_1 = \frac{c}{ab}$$

Here a and b are the radii of the two spheres, q_1 and q_2 are their charges, and c is the separation of their centers.

1814 Agronomy. Calibration of Soil Tests with Crop Response. The major problem is fitting a response curve of a type

$$y = A\left[1 - e^{-(bx + cz)}\right]$$

in which y, x and z are experimental values. If proper fitting is successful, prediction value can be established and fertilizer recommendations can be made consistent with the soil tests.

A new Illiac program is being written to accomplish this.

1815T Electrical Engineering. Ion Cyclotron Waves. The Boltzmann equation for ions in a uniform, completely ionized, isothermal, deuterium plasma has been solved by expressing the distribution function as a series of orthogonal polynomials in velocity space with time dependent expansion coefficients. The fields assumed are a constant axial magnetic field and an electric field whose frequency is near the ion cyclotron frequency. The conductivity due to the ions is simply related to certain of these expansion coefficients, a correction being inserted because of the electronic conductivity. The conductivity so derived is then substituted into Maxwell's equations to obtain a dispersion relation, where the parameters are the magnetic field and the wave launching angle. Because of the complicated nature of the dispersion relation, it is proposed to use the Illiac to find its roots for a change of values of the parameters. Standard library floating-point routines and the Newton-Raphson method are to be employed. The roots describe the wave modes which can exist in such a plasma.

1816 Agronomy. Drainage of a Saturated Column. The problem is that of determining the moisture content of a soil which was initially saturated. This requires the solution of a boundary value problem involving a non-linear partial differential equation of parabolic type in two independent variables. The problem is converted to a finite difference problem which necessitates the solution of a large system of linear equations, whose matrix is of tri-diagonal type.

1817 Coordinated Science Laboratory. TASC - Engineering Test. A diagnostic routine has been written that will serve as a routine test of TASC and associated equipment.

1818 Psychology. Parent-Child Relationships. Parents and children in each of 65 Sicilian families have been interviewed and observed. Attitude ratings for parents are to be factorized, ratings of children are to be factorized, and the two sets of factors interrelated.

1819T Education. Pace Need-Press Study. Six factor analyses of correlation matrices of Stern-Pace need-press variables are desired. It is proposed to accomplish these by a centroid and then a Varimax analysis.

1820T Civil Engineering. An Iterative Procedure for Solving Finite-Difference Equations of Elliptic Type. The purpose of this program is to develop an improved iterative procedure for solving simultaneous linear equations obtained from a finite difference solution of partial differential equations of elliptic type, especially the plate equation.

This purpose is two-fold--to improve the convergence over the existing iterative techniques and thereby make it possible to solve problems in which the convergence of existing iterative techniques is too slow to make the solution economically feasible on a digital computer, and problems in which the number of equations is too large for available iterative techniques within normal time limits. Once the improved procedure is developed, it is intended to solve some plate problems to illustrate the utility of the method.

Illiac will be used in the most efficient way. The method of solving the equations will be essentially similar to that of the systematic iteration of Gauss-Seidel or of the successive over-relaxation method of Young. The number of memory locations required for storage of data will be equal to the number of independent variables. This will enable the fast memory to be sufficient, even when the number of equations is as large as 400.

1821 Psychology. Characteristics of Subject Volunteers for Hypnosis Research. A questionnaire has been administered to elicit information about the experiences of respondents with hypnosis, their feelings about being experimental subjects and their general knowledge and estimates of public opinion of hypnotic phenomena.

Standard library routines are to be used to compute a 67 variable correlation matrix from a sample of 645 subjects.

1822 Psychology. Factor Analysis Invariance. Considerable discussion and controversy exists on possible invariance in factor analysis results as related to several kinds of changes in the data subjected to analysis. Between two studies different selections of variables may be made, or different selections of individuals may be made. The present project is being designed to investigate the effects of these kinds of changes on factor analytic results. A large collection of hypothetical data will be generated from which data a number of factor analyses will be drawn according to several plans for selective sampling among individuals and variables. The factor analysis results will be investigated for invariant features.

This program involves a large amount of calculation in the generation of the hypothetical data and the factor analyses. Existing matrix and factor analysis programs will be used.

1823 Mechanical Engineering. Temperature Field Determination. This problem is the determination of the temperature field in a tube which is half imbedded in an insulating wall. The tube loses heat to ambient air. The outer unit surface conductance and ambient air temperature are nonuniformly distributed. The Laplace equation describing the steady state temperature distribution may be approximated by 36 linear, algebraic, residual equations. It is proposed that the resulting equations be solved on the computer.

Table I shows the distribution of Illiac machine time for the month of November.

TABLE I

	Hrs:Min	
Scheduled Maintenance	60:24	
Unscheduled Maintenance	20:32	
Drum Engineering	3:57	
R. A. R.	2:01	
Leapfrog	9:58	
Wasted	:10	
Library Development	3:50	
Demonstrations	2:57	
Classes	10:01	
		113:50

Use by Departments

Agricultural Economics	3:14
Agronomy	9:03
Animal Science	6:18
Bureau of Educational Research	6:50
Chemistry (NSFG 7336)	23:17
Chemistry	40:58
Civil Engineering (AASHO ROAD TEST)	3:24
Civil Engineering (NSF-G6572)	:58
Civil Engineering	68:47
Coordinated Science Lab. (DA-36-039-SC56695)	69:18
Dairy Science	:21
Digital Computer Lab. (AEC AT(11-1)-415)	8:34
Digital Computer Lab. (NSF GRANT 9503)	13:15
Digital Computer Lab. (NONR 1834(27))	:57
Digital Computer Laboratory	2:32
Economics (NSFG 7056)	6:07
Economics	:08
Education	:11
Electrican Engineering (NONR 1834(22))	2:12
Electrical Engineering (NASA-N5624-59)	:23
Electrical Engineering (AF 19(604)-5565)	:19
Electrical Engineering (NONR 1834(02))	2:57
Electrical Engineering	15:15
Food Technology (50-343)	:23
Geology	:11
Institute of Communications Res. (44-28-20-378)	4:40
Institute of Communications Res. (46-28-20-364)	1:33

Institute of Labor and Industrial Relations	2:54	
Inst. for Res. on Excep. Chil. (H E AND W SAE 8204)	:21	
Inst. for Res. on Excep. Chil. (USPH NIH M-3207)	:20	
Mathematics	1:46	
Mechanical Engineering	2:31	
Mining and Metallurgical Eng. (TRUS AF 6770)	:06	
Mining and Metallurgical Engineering	1:53	
Music	:16	
Physical Education	:03	
Physics (NONR 1834(05))	:42	
Physics (Gen. Elec. Fellowship)	1:05	
Physics (AF 49(638)-529)	:13	
Physics	5:38	
Psychology (MD 2060)	:56	
Psychology (AF 49(638)371)	1:41	
Psychology	51:44	
Sociology	5:16	
State Water Survey (DA-36-039-SC75055)	:39	
State Water Survey	5:44	
Theo. and Appl. Mech. (NOBS 72069)	1:35	
Theo. and Appl. Mech. (AF(616)6643)	:35	
Theoretical and Applied Mechanics	1:20	
Zoology	2:34	
United States Navy	1:34	
University of Sydney	:31	
		391:45
		505:35

Error Frequency and Analysis

The machine is normally used for "engineering" and maintenance between 7:00 a.m. and 10:30 a.m. Since the periods between 7:00 a.m. and 10:30 a.m., together with certain irregular periods, such as Saturdays and Sundays, are devoted to a heterogeneous group of engineering, maintenance, and laboratory functions, it is more instructive, from an error standpoint, to look at the periods between 10:30 a.m. and 7:00 a.m. of the next day in order to make an observation of the error frequency in the machine. This is the actual period when the machine is designated for use, although certain engineering procedures frequently require the scheduling of extra maintenance time. With this in mind, a summary table has been prepared using the period between 10:30 a.m. and 7:00 a.m. of the next day. This table lists the running time when the machine was operating, the amount of time devoted to routine engineering, the amount of time devoted to repairs because of breakdowns, and a number of failures while the machine was listed as running. Each failure was considered to have terminated

a running period and was followed by a repair period in preparing this table. Since the leapfrog code is our most significant machine test, the length of time which it has been used on the machine is listed separately, together with the number of errors associated with that particular code. This information for the month is presented in Table II.

It is important to notice that, except during scheduled engineering periods, any interruption of machine time that was not planned is considered a failure in this table. In rare cases, where the failure is not known until a later time, it is possible that no repair period is associated with the failure. This over-all system has been adopted because it makes it possible for a machine user to estimate directly the probability that the machine will be "running" any instant of time and the probability of a failure during any given interval of running time.

Table III presents a summary of errors or interruptions for November.

TABLE III

Memory	10
Arithmetic	2
Reader	1
Punch	5
Scope	3
Drum	3
Power Supply	1
Unknown	2
Total	27

DATE	RUNNING OK TIME	REPAIR TIME	SCHEDULED ENGINEERING	INTERRUPTIONS OR FAILURES STOPPING OK TIME	TYPES OF INTERRUPTIONS OR FAILURES CAUSING REPAIR TIME	WASTED	LEAPFROG	FAILURES STOPPING LEAPFROG
11/1/60	19:41	:40	3:39	2	(1) Memory Failure 2^{-16}. (2) Memory Failure 2^{-9}.	:00	:25	1
11/2/60	19:11	1:42	3:07	4	(1) Memory Position 2^{-22}. (2) Memory Position 2^{-22}. (3) Memory Position 2^{-22} (4) Scope out of adjustment.	:00	:55	2
11/3/60	20:34	:00	3:26	0		:00	:32	0
11/4/60	19:48	1:42	2:30	3	(1) Scope not operating properly. (2) Memory Failure, Low Filaments. (3) Memory Failure 2^{-16}.	:00	1:00	1
11/7/60	19:43	:44	3:33	1	(1) Bad Tube in Adder.	:00	:23	0
11/8/60	20:13	:00	3:37	0		:00	:41	0
11/9/60	15:31	4:59	3:30	1	(1) Power Supply Failure.	:00	:20	0
11/10/60	21:39	:46	1:35	2	(1) Scope Inoperative. (2) Drum Failure.	:00	:37	0
11/11/60	21:30	:00	2:30	0		:00	:20	0
11/14/60	20:16	:21	3:23	1	(1) Drum Failure.	:00	:36	0
11/15/60	20:47	:43	2:30	1	(1) Memory Position 2^{-19}.	:00	:20	0
11/16/60	20:28	:00	3:32	0		:00	:02	0
11/17/60	22:32	:00	1:28	0		:00	:12	0
11/18/60	21:29	:10	2:21	2	(1) Unknown. (2) Punch #4 Failed.	:00	:00	0
11/21/60	21:30	:00	2:30	0		:00	1:50	0

DATE	RUNNING OK TIME	REPAIR TIME	SCHEDULED ENGINEERING	INTERRUPTIONS OR FAILURES STOPPING OK TIME	TYPES OF INTERRUPTIONS OR FAILURES CAUSING REPAIR TIME	WASTED	LEAPFROG	FAILURES STOPPING LEAPFROG
11/22/60	20:30	:25	3:05	3	(1) Punch #4 failed. (2) Punch #4 failed. (3) Punch # 4 failed.	:00	:26	0
11/23/60	21:17	:08	2:30	1	(1) Reader "B" failed.	:05	:10	0
11/25/60	22:00	:18	1:37	2	(1) Punch #4 failed. (2) Unknown.	:05	:10	0
11/28/60	22:00	:00	2:00	0		:00	:16	0
11/29/60	19:17	1:14	3:29	1	(1) Arithmetic failure.	:00	:20	0
11/30/60	18:01	2:41	3:18	3	(1) Drum failure. (2) Memory failure position 2^{-5}. (3) Memory failure positions 5, 24, 19.	:00	:23	1
TOTALS	428:07	16:33	59:10	27		:10	9:58	5

PART VII

INTERNATIONAL BUSINESS MACHINES 650 USE AND OPERATION

International Business Machines 650 Programming

A general statistical program for either regression analysis or analysis of variance and covariance is being prepared for the International Business Machines 650. This program will have several options and can be used in place of Illiac programs K-14, K-15, K-16 and K-17; hence, it is convenient to write the routine in sections. The input section for fixed point data has been coded and checked.

(K. Dickman, F. Fischer)

International Business Machines 650 Usage

During the month of November, specifications were presented for eight new problems. This list does not indicate how the International Business Machines 650 was used, because large amounts of machine time may have been consumed by problems with numbers less than 184'T. Numbers followed by T are for theses.

184'T Marketing. Study of Retail Trade Movements in Metropolitan Areas. This research is to determine percentage changes in retail sales and number of stores between the standard metropolitan areas (SMA) of the United States and the non-metropolitan areas of the United States. Comparisons are to be made of a number of kinds of business to determine:

1. The percentage change in ten major types of business as compared to the total SMA.
2. The percentage each sub-classification is of the major types of business and of the total of the SMA.
3. Comparison of total SMA sales and stores by kind of business to the non-metropolitan sector.
4. A comparison of total SMA sales and stores by each major classification and each sub-classification to the total metropolitan area sales and number of stores.

All figures are to be obtained for the period from 1939-1958.

185'T Mechanical Engineering. Integration by Simpson's Rule. It is required to find the profile of a fin, radiating in space. In this connection, evaluation of the following integral is necessary.

$$L(\varphi) = \int_{0.04}^{\varphi} \frac{1-\varphi^4}{\varphi^3} \left[E^3(\varphi) - \frac{\varphi^9}{\varphi_e^9} E^3(\varphi_e)\right] d\varphi$$

where $E(\varphi) = 1 - 3.6\varphi^4 + 9\varphi^8 - 6.4\varphi^9$ with φ_e as parameter.

186'T Physics. Olson and Maximon Bremsstrahlung: Spectrum and Integral. High frequency limit of the Bremsstrahlung Spectrum at 15.1 MEV is to be investigated. The isochromat measurements involve a cumbersome expression:

$$\frac{kd\sigma}{dkdw} = \frac{2\Phi}{\pi} p^2 \xi^2 \left\{\left(1 + \left(\frac{\epsilon_2}{\epsilon_1}\right)^2\right)(\ln M-1) - \left(\frac{\epsilon_2}{\epsilon_1}\right)\left[2 + 4u^2\xi^2(\ln M-4)\right]\right\}$$

where $\ln M = 2\ln\frac{1}{\delta} - 2f+2f$; or $\ln M = 2\ln\frac{111}{z^{1/3}\xi} - 2f$ depending upon complete screening of the γ beam.

$f = f(z) =$ const. or

$F =$ tabular value as a function of $\frac{6z^{1/3}\xi}{121\delta}$ depending upon screening.

Another tabular value, e^{-x}, is involved in determination of the area integral described by changing k with constant ϵ. The problem involves approximately 200 values of $\frac{kd\sigma}{dkdw}$ according to the parameter, k, ϵ and δ. Also, a numerical integration program will be used approximately 16 times to determine the areas of $\frac{kd\sigma}{dkdw}$ as k varies according to ϵ and θ.

187' Education. Teacher Placement Program. The purpose of the Teacher Placement Program is to provide a faster and more efficient method of selecting qualified candidates for positions in the field of education. Hence, this is primarily an administrative problem.

Presently, a great portion of the time used to select applicants for positions is given to the clerical processes of matching applicants' qualifications against job requirements. It is hoped by using the International Business Machines 650 that this portion of selecting applicants against

jobs will prove to be faster and more efficient. Also, it is hoped that this system will later provide information useful in compiling statistical reports and other such studies.

188'T Theoretical and Applied Mechanics. Parameter Interaction Equations. A solution based on interaction curves is to be obtained from two parametric interaction equations. This program computes coordinates for the curves by varying the parameters and solving the equations. All variables will be read in so that the program may be used for various conditions. The equation to be evaluated is:

$$P/P_e = a_1 + a_2 + \frac{\alpha}{k}(a_1^2 - a_2^2)$$

$$M/M_e = k^2 + 3a_1(1-a_1) + 3a_2(1-a_2) + \frac{\alpha}{k}a_1^2(3-2a_1) + \frac{\alpha}{k}a_2^2(3-2a_2)$$

where a_1, a_2 and k are parameters such that $a_1+a_2+k = 1$

α - depends upon the material for which the curves are constructed

k - determines the number of curves (between 8 and 30)

M - the number of pairs of coordinates desired for the curve. This controls the number of times the parameters are varied (3 - 15 times).

189' Agronomy. Corn Performance Testing. This is a problem of analysis of variance of current data (such as performance characteristics, yield, height, etc.), printing of results in tabular form, and combining new data with old for a combined analysis of variance. A new program is being written for the 650 to accomplish this.

190' Physics. Field Gradients. Research on field gradients of interest for the problem of quadrupole interactions of metals involves calculations of expressions containing e^{-x} and sinh x. The primary reason for 650 use is to evaluate the algebraic terms for arguments in the exponential and sinh to at least 6 digits. Tables are not available to an accuracy of over 4 digits.

191' Bursar's Office. Data to Write W2 Statements. This is a one-time job which will no longer be run after this time. We would like the job completed by January 10. It is a simple problem which will require less than one hour to code check.

Table I' shows the distribution of the International Business Machines 650 machine time for the month of November.

TABLE I'

		Hrs:Min	
Scheduled Engineering		15:43	
Unscheduled Engineering		6:27	
Air Conditioning		3:04	
Agronomy Library		2:38	
Digital Computer Laboratory Library		1:00	
Classes		5:18	
CE 391	5:05		
Instruction	:13		
Demonstrations		1:56	
Wasted		3:24	
			39:30

Use by Departments

Agricultural Economics		3:41
Agronomy		4:10
Animal Science		2:28
Astronomy		2:28
Chemistry		3:45
Civil Engineering		34:40
Digital Computer Laboratory		12:14
Electrical Engineering		1:19
Graduate College		5:10
Mechanical Engineering		3:49
Physics		1:59
Psychology		1:05
State Water Survey		3:58
Statistical Service Unit		116:27
Admissions and Records	11:04	
Agricultural Extension	:43	
Bureau of Educational Research	9:03	
Bursar's Office	11:09	
Business Office	12:30	
DHIA	42:09	
Education	5:45	
Forestry	:23	
Home Economics	1:00	

Horticulture	9:13		
ILIR	4:40		
Marketing	1:34		
Music	:11		
Political Science	4:54		
Psychology	2:04		
Student Counseling Service	:05		
Theoretical and Applied Mechanics		:22	
			197:35
			237:05

Error Frequency and Analysis

The International Business Machines 650 is normally on from 8:00 a.m. to 5:00 p.m. The machine is used for preventive maintenance from 8:00 a.m. to 12:00 noon on Mondays.

Table II' gives the daily breakdown of machine time with respect to wastage and unscheduled maintenance.

Table III' presents a summary of errors for November.

TABLE III'

Tape, tape control, or tape unit		80
Fails to load rewind, recognize load point or start	6	
Writes incorrectly	3	
Reads incorrectly	61	
Tape control hang ups	8	
Unknown	2	
533		14
Card jam	2	
Card feed stops	12	
407		7
Added incorrectly	1	
Prints incorrectly	6	
Double or blank bits		18
Loose switch		1
Storage unit		2
False program light		1
Air conditioning		1
Unknown		1
Total		125

DATE	RUNNING OK TIME	SCHEDULED ENGINEERING	REPAIR TIME	WASTED	FAILURES STOPPING OK TIME	AIR CONDI-TION-ING	TYPES OF FAILURES CAUSING REPAIR TIME
11/1/60	9:10			:20	4		(1) 407 error in addition. (2)(3)(4) Tape unit 3 failed to recognize load point.
11/2/60	11:40		:10	:05	2		(1) Address selection switch loose. (2) Tape unit 3 didn't recognize load point.
11/3/60	11:10			:03	0		
11/4/60	9:58			:13	1		(1) Hung up on blank bits in the accumulator. Reran on 11/7 okay.
11/7/60	7:39	3:48			0		
11/8/60	10:26			:09	2		(1) Tape unit 2 would not write correctly. (2) Could not dump tape on unit 2.
11/9/60	10:02		3:28	:05	2		(1) Tape unit 2 wouldn't write correctly. (2) Card jam in 533.
11/10/60	9:57		:45	:05	5		(1)(2)(3)(4) Lost a 1 quinary bit in pos. 5 of Pr. Reg. (5) Hung up with a PR light.
11/11/60	8:51		:04	:30	1		(1) Program register lost bits in pos. 5 and had double bits in pos. 3.
11/14/60	7:02	4:00			0		
11/15/60	10:29		:14	:17	2		(1)(2) Prints - instead of 8 at random on-line.
11/16/60	10:49			:16	2		(1)(2) Dumps on-line giving - instead of 8 at random locations.
11/17/60	10:44			:16	15		(1)-(15) Writes on new tape correctly, but had trouble reading correctly.

DATE	RUNNING OK TIME	SCHEDULED ENGINEERING	REPAIR TIME	WASTED	FAILURES STOPPING OK TIME	AIR CONDI-TION-ING	TYPES OF FAILURES CAUSING REPAIR TIME
11/18/60	7:53			:03	28	3:04	(1) Air conditioning. (2)(3) Blanks in accumulator. (4)-(28) Writes on new tape correctly but had trouble reading correctly.
11/21/60	7:02	3:58		:02	2		(1) Tape error. (2) Accumulator had blank bits and double bits.
11/22/60	10:45			:23	2		(1) Accumulator trouble from 0905. (2) Tape unit 1 trouble. Unknown.
11/23/60	12:33			:10	24		(1)-(20) With tape unit 1 set on 8011-writing then reading to check tape. 20 hangups in checking. (21) Unknown. (22) (23)(24) UA had DB in pos. 10.
11/25/60	11:54			:09	1		(1) Tape unit 3 did a load rewind but would not start.
11/28/60	7:56	3:57	:26		16		(1) Unit 3 would not load rewind. (2) Tape unit 1 set on 8011. (3) 533 card feed stops. (4)-(16) Double bits in UA.
11/29/60	11:16		:34	:13	11		(1)-(8) Tape control hangs up. (9)-(11) Double bits in program register and UA.
11/30/60	11:11		:46	:05	5		(1)(2) 407 printing - instead of 8. (3) (4) Storage unit lights. No error in IAS. (5) Card jam in 533 removed.
TOTALS	208:27	15:43	6:27	3:24	125	3:04	

PART VIII

GENERAL LABORATORY INFORMATION

Seminars

"Alternating Direction Methods", by Professor Jim Douglas, Department of Mathematics, The Rice Institute, Houston, Texas, November 7, 1960.

"Roundoff-Error Accumulation in Iterative Procedures", by Professor A. H. Taub, Digital Computer Laboratory, University of Illinois, Urbana, Illinois, November 21, 1960.

"The Logical Structure of the Lincoln Computers", Dr. Wesley A. Clark, Lincoln Laboratory, Massachusetts Institute of Technology, Cambridge, Massachusetts, November 28, 1960.

Personnel

The number of people associated with the laboratory in various capacities is given in the following table:

	Full-time	Part-time	Full-time Equivalent
Faculty	10	1	10.75
Visiting Faculty	2	-	2.00
Research Associates	2	-	2.00
Graduate Research Assistants	8	28	23.25
Graduate Teaching Assistants	-	5	2.50
Administrative and Clerical	6	-	6.00
Other Nonacademic Personnel	36	13	41.07
Totals	64	47	87.57

The Laboratory Advisory Committee consists of Professors H. C. Brearley, L. D. Fosdick, D. B. Gillies, B. H. McCormick, G. A. Metze, D. E. Muller, T. A. Murrell, W. J. Poppelbaum, J. E. Roberton, and J. N. Snyder.

UNIVERSITY OF ILLINOIS

GRADUATE COLLEGE

DIGITAL COMPUTER LABORATORY

TECHNICAL PROGRESS REPORT

PART I - HIGH-SPEED COMPUTER PROGRAM

PART II - CIRCUIT RESEARCH PROGRAM

PART III - SWITCHING CIRCUIT THEORY

PART IV - DATA REDUCTION METHODS

PART V - ILLIAC USE AND OPERATION

PART VI - IBM 650 USE AND OPERATION

PART VII - GENERAL LABORATORY INFORMATION

December, 1960

PART I

HIGH-SPEED COMPUTER PROGRAM

This work is supported in part by Contract No. AT(11-1)415 of the Atomic Energy Commission and in part by the University of Illinois. Contract No. AT(11-1)415 is supported jointly by the Atomic Energy Commission and the Office of Naval Research.

1. Physical Aspects of Machine Construction

(1.1) Chassis Modules

The fabrication of chassis modules requires three steps: casting, terminal strips, and machining and assembly.

Purchase orders were sent to manufacturers during the month as follows:

Castings, December 2.

Terminal strips, December 2.

Machining and assembly, December 15.

(1.2) Small Parts

The order for heatsinks for the 2N706 transistor (drawing No. A-2004) was completed.

The order for heatsinks for the 2N1072 transistor (drawing No. A-2005) and for component strip B-2003 was delayed by misunderstandings with the manufacturer. The difficulty was resolved December 27.

Orders for No. A-2001 and A-2002 are still outstanding.

(1.3) Main Arithmetic Unit

Chassis construction as of December 27. Complete:

QRM (D966) ——> 1, 2, 3

QRM-D^2 (D977) —> 1, 2

A (D978) ——> 1, 2, 4, 5

AS-D^2 (D976)----> 1, 2, 4

S (D980) ——> 1, 2, 3

FF_c (D997) ——> 1

Chassis complete except for diodes:

QRM (D966) ——> 4, 5

QRM-D^2 (D977) —> 4

A (D978) ——> 3, 6, 7, 8, 9, 10, 11

AS-D^2 (D976) —> 3, 5

S (D980) ——> 4, 5, 6

FF_C (D997) ——> 2, 3, 4

FF_D (D995) ——> 1, 2

Chassis under construction:

QRM (D966) ——> 6, 7, 8, 9, 10, 11

QRM-D^2 (D977) —> 3, 5

A (D978) ——> 12, 13

S (D980) ——> 7, 8, 9, 10, 11

(C. Carter, T. Kerkering, and Shop)

2. Shift Unit #2

(2.1) Relay rack mounting and interconnecting wires were arranged to hold one each of QRM, A, and S chassis of the main arithmetic unit (MAU), representing a 4-bit slice of the arithmetic unit.

(2.2) The 4-bit slice of the MAU was powered from the shift unit #2. The control gates of the speed independent control of shift unit #2 were used as the gA, gS, gQ, gR.

Two open diodes, two open resistors and three shorted filter capacitors were found in these three chassis.

The four non-symmetric gates generated by the speed-independent control are used as follows, with the time duration shown:

gQ, gA ——> 102 mμsec, + control delay 42 mμsec.

gR, gS ——> 105 mμsec, + control delay 36 mμsec.

gQ, gA ——> 106 mμsec, + control delay 42 mμsec.

gR, gS ——> 124 mμsec, + control delay 36 mμsec.

Thus, the gating time is about 140 mμsec.

Under these conditions, it was found that the information at each adder output was arriving at the input of the destination register at least 50 mμsec ahead of its accompanying gate.

The important conclusions from the test of this 4-bit slice are (1) wiring accuracy and initial component reliability are satisfactory; (2) the unit is subject to some radiation interference; (3) the α_i bit lines should be loose twisted pairs (particularly for the 2 feet required for interchange); (4) the adder times are those determined by the adder test of the AND-OR complex adder, namely, 90 mμsec for the worst case.

Much time was spent on tests of various cable driver circuits on the test unit #2 rack. Without exception, these cable drivers in operation proved to be very good, but due to the inability to simulate worst case conditions, these results were more of the nature of confirming time delays, rise and fall times, and voltage excursions.

(C. Carter, S. Krabbe)

3. Drawings

The status of drawings is summarized below:

End connection chassis

D 1024	A^*_{40-44}		Complete
C 1025	A^*_{40-44}	Logic and specifications	Complete
D 1026	S^*_{40-44}		Complete
C 1027	S^*_{40-44}	Logic and specifications	Complete
D 1002	A^*_{0-4}		Complete
C 1003	A^*_{0-4}	Logic and specifications	Complete
D 1006	S^*_{0-4}		Complete
C 1007	S^*_{0-4}	Logic and specifications	Complete
D 1004	$S_{-3}-S_0$		Pencil Drawings
D 1008	QRM $(M_{-1,0})(R_{-1,0}^*)(Q_{-1,0}^*)$		Pencil Drawings
D 1022	QRM_{41-44}		Pencil Drawings

D 1000	$A^*_{-1} - A_0$	Partial Pencil Drawings
D 1016	A^*_{44}	Partial Pencil Drawings
D 1018	S^*_{44}	Partial Pencil Drawings
D 993	Pencil sketches of new flow gating chassis	
D 994	Pencil sketches of new flow gating chassis	
D 995	Pencil sketches of new flow gating chassis	
D 996	Pencil sketches of new flow gating chassis	
D 1009	$F_{TGC,3C}$	Driver Drivers Complete

(S. Krabbe, H. Lopeman)

4. Speed-Independent Design Rules

During the month, the set of basic logical diagrams was enlarged to a total of 16 drawings. Each of these has been issued to the logical design group and each has been checked on Illiac Q-5 routine to verify that it is indeed speed-independent. In working with the flow charts for the delayed control, it is apparent that five or six more basic logical diagrams will be needed.

In the speed-independent control design used, each step in the arithmetic process is regulated by an Eccles-Jordan Flipflop with OR circuits on its inputs and a restoring AND at its output. For simplicity, this collection of logic is referred to as a control point. As work on the control progresses, it becomes increasingly apparent that one of the bigger problems in control design will be to provide the fan-in and fan-out required at the control points. Because of the fan-in problem, consideration is being given to a new system for controlling M selectors which uses only one reply to the control point, whereas the present system gives four replies.

(R. E. Swartwout)

A method of entering and leaving two-step loops was proposed.

(J. O. Penhollow)

A study was made of race conditions between delayed control and the data paths in both the MAU and EAU. This study consisted of making timing analyses for floating addition, shift and multiplication. This study was used to define the boundary between the speed-independent control and the non-speed-independent AU. It was decided that in future timing analyses, nominal delay times rather than worst or best case delays would be used. Furthermore, on the basis of nominal delay times, the safety margin for a given race must exceed 30 per cent of the cycle time before it is considered safe to operate the decoder or detector in question in a non-speed-independent fashion. A timing analysis of division was made on this basis. It was found that critical safety margins exceeded 30 per cent of the cycle time using a speed-independent predictor. It was also found that, as in multiplication, the M-selector reply back set the cycle time when the new and old settings disagreed.

(R. E. Swartwout, J. O. Penhollow)

5. Control Design

The logical layout of division control was started by J. O. Penhollow, and the operations "load Q", "difference absolute value", and the first parts of several store orders were designed by H. Aiso.

The decode logic for the E-adder conditions was completed, drawn up, checked, and added to existing drawings.

(M. Faiman)

Control Sequences

Many of the control sequences were re-drawn to incorporate new design rules and eliminate race conditions, and a preliminary study was made of "decode", the first operation in every instruction. One of the more difficult requirements to fulfill is that the same gate or flipflop, or two members of the same family of selectors may not be changed in two successive control steps. Apart from decode, these operations were completed and partially checked.

(H. Aiso, R. Shively, D. Gillies)

6. Circuits for Control

A short report was written on the method of specifying the stabistors for bumping voltages applied to non-restoring logic. The principles employed and assumptions made were the same as those to be found in File Number 343. Whereas a straightforward procedure was obtained, it appears that the assumed worst-case conditions are more stringent than they need to be. No revision of the report has as yet been made.

(M. Faiman)

An assumption in speed-independent theory is that each signal voltage is unequivocally interpreted as either a 1 or a 0. In practice, there exists a range of input voltages for which, due to tolerance variations, it is impossible to predict the interpretation of the signal voltage. In File Number 353, "Threshold Uncertainty and its Effect on Control Circuit Design", methods of calculating these uncertainty ranges are presented. For a particular case in which one signal is used as the inputs to two circuits, a method of insuring correct operation by shifting one of the uncertainty ranges so that the uncertainty ranges of the two circuits do not overlap is described. Modifications of non-restoring logic to increase cascading in these circumstances are also described.

(G. Metze, J. Robertson)

7. Core Storage Unit

During this month, aluminum covers were constructed and installed on the model memory and all incoming lines were filtered or shielded. This has apparently reduced the externally-generated noise to a negligible value. Under these conditions, a 103-hour error-free run was obtained with a 0101... pattern at 1.6 μs. cycle time (read and rewrite only) and using 2 bits of 64 words representatively located in a full-scale core plane stack.

Nevertheless, the sense signals from the amplifiers are noisier than expected and efforts to improve these will continue.

All chassis layout is complete, except for minor details.

(S. Ray)

The core memory parity adder drawing has been completed and exists now as drawing B1070.

The tolerance analysis results for the EQUIVALENCE/EXCLUSIVE-OR (non-restoring) circuit have been documented in File No. 355, and the basic circuit drawing is B1071.

(J. L. Muerle)

8. Slow Circuits

Tolerance analysis of completed slow circuits was begun. Illiac was used for circuits incorporating resistive bleeders.

(M. D. Freedman)

Investigation was begun into using zener diodes in bleeder chains to drive multiple single ended emitter followers from the same bleeder. Proper selection of zener voltages will eliminate the positive bump diode and stabistor. Acceptable current into the bleeder can be greatly increased without high bleeder standing currents. V_{cb_r} could be reduced on purchase specifications for transistors or, if existing transistors are used ($|V_{cb_r}| \geq 25v$), the collector-base reverse voltage will not be a factor in bleeder design.

(L. J. Peek, Jr.)

9. Magnetic Drum Memory

Most of the methods described in the literature for combined read-write selection of magnetic drum heads are not suitable for non-return-to-zero recording, since they use transformers for a variety of reasons. A system described by L. D. Seader in the IBM Journal of Research and Development appears to approximate our requirements best. Detailed analysis of this system and modification to suit our requirements continues.

Photographs of ILLIAC drum output waveforms were analyzed to find the types of errors which occur in a single track, and the correction procedures needed. The amplitude distributions are shown in Figure 1. The only severe error occurs at the bit time immediately preceding a legitimate

flux change, where "no flux change" is in danger of being interpreted as "flux change". Possible reasons for this error include

(1) Head asymmetry

(2) Slow rise of record currents

(3) Differentiation in the playback amplifier

A correction procedure based on information from the next succeeding bit is seen to be necessary and sufficient. Such a circuit exists in the ILLIAC drum memory.

Experiments on a drum that is more similar to the new computer drums are needed before conclusions can be drawn about error correcting circuits for the new computer.

(P. V. S. Rao)

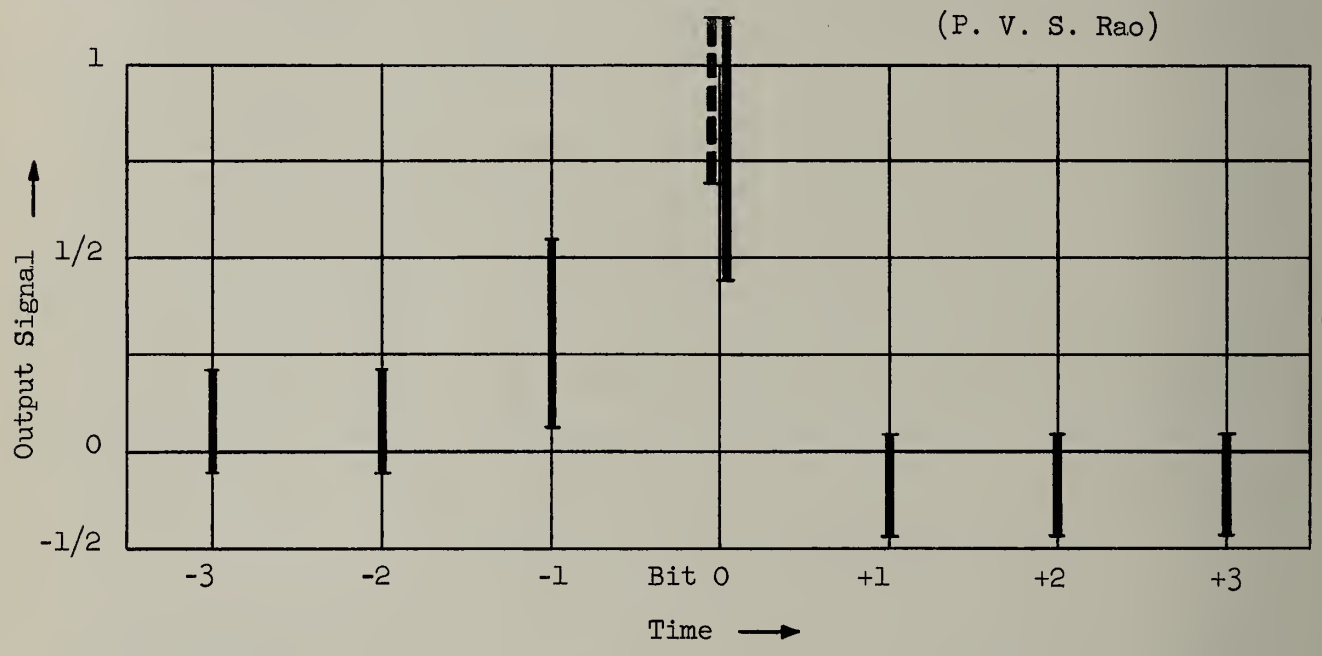

Notes:

(1) Bit 0 refers to the bit at which flux change occurs. Other bit numbers are relative to this.

(2) Mean signal output at bit 0 is the unit of measurement.

(3) Dashed line represents the range of variation of the output signal peak amplitude.

(4) Solid lines represent the range of variation of signal height for the duration of the corresponding amplifier strobe pulse.

(5) Results are identical for signals of either polarity.

FIGURE 1. Variation of ILLIAC Drum Signal at Output of Playback Amplifier.

Control circuits for the magnetic drum memory are being studied. The Eccles-Jordan circuit (drawing B955) is being considered as the memory element for the control.

(C. N. Liu)

The study of write and read amplifiers for the magnetic drum was continued. The following conditions are being assumed until an order is placed for a drum.

Write Amplifier

1. Input: Standard logic levels.
2. Output Current: 50 to 200 ma in half of head winding.
3. Output Rise Time: As fast as possible, consistent with load stray capacity.
4. Load: Writing head, center tapped winding, 30 μh per leg, resonant frequency (series connection) 1.5 to 2.5 mc.
5. Bit Period: 1.8 μsec.

Read Amplifier

1. Normal Input: 10 to 100 mv. (open circuit, series connection).
2. Output: Large enough for track switching.

(H. Yazaki)

10. Magnetic Tape Memory

Work continued on the single-error-correcting, double-error-detecting magnetic tape codes. The objective is to reduce the number of channels required to realize codes having the properties discussed in D. C. L. File 335. The method is to obtain a theoretical minimum for the number of channels in any specific instance, and then to use ILLIAC to find practical realizations. Comparisons will eventually be made on the basis of equipment costs.

(R. L. Cummins)

11. Paper Tape Equipment

A final specification for paper tape editing equipment was written (File No. 352, Revised), based on the assumption of the use of 8-hole paper tape, where 6 holes of a tape character define a type bar of the typewriter, a seventh hole defines the case in which this character is to be printed, and the eighth hole is used for an even parity check bit. Accompanying this assumption, it is proposed that tape characters be read into the machine and stacked four 7-bit characters to the word for most purposes. To input binary information, it is necessary to provide another input mode in which only the tape characters 0 - 7 would be read by the tape reader, and these octal (3 bit) characters would be assembled 4 to the control group, 4 control 13 bit groups to the word. Similar alternatives would apply for output. Bids are being requested for the supply of one editing set to these specifications.

(C. S. Wallace)

PART II

CIRCUIT RESEARCH PROGRAM

(Supported in part by the Office of Naval Research under Contract Nonr-1834(15).)

1. General

During December, a project was started which, it is hoped, will ultimately lead to the design of a shifting register with its control circuits (clock, counter, etc.), capable of an up and down shift on less than five mμs. The circuits to be used are those described during the last several months under the title, "Low Swing Difference Amplifier Circuits". C. Afuso has furthered his investigation of more complex circuits of this type (see Section 2), while H. Guckel has investigated the production of a 200 mc clock using distributed amplifiers and a special flipflop (see Section 3). K. Batcher has worked on the design of such a clock by more classical means (see Section 4).

R. Crow has surveyed the field of theoretical and experimental work on large pulses in forward biassed diodes and some measurements were made on diodes of the type Transitron S577G (see Section 5).

2. Low Swing Difference Amplifier System

The experimental circuit for an F-element has been built. The circuit is shown in Figure 1. The measurements showed that the risetime of the output was about 10 mμsec (by Lumatron Scope). Before doing any further experiments, more basic measurements were made on the circuit shown in Figure 2.

The measurements show that for I_e = 20 ma, the risetime of the output voltage is about 2 mμsec; for I_e = 12 ma, 1.6 mμsec were observed.

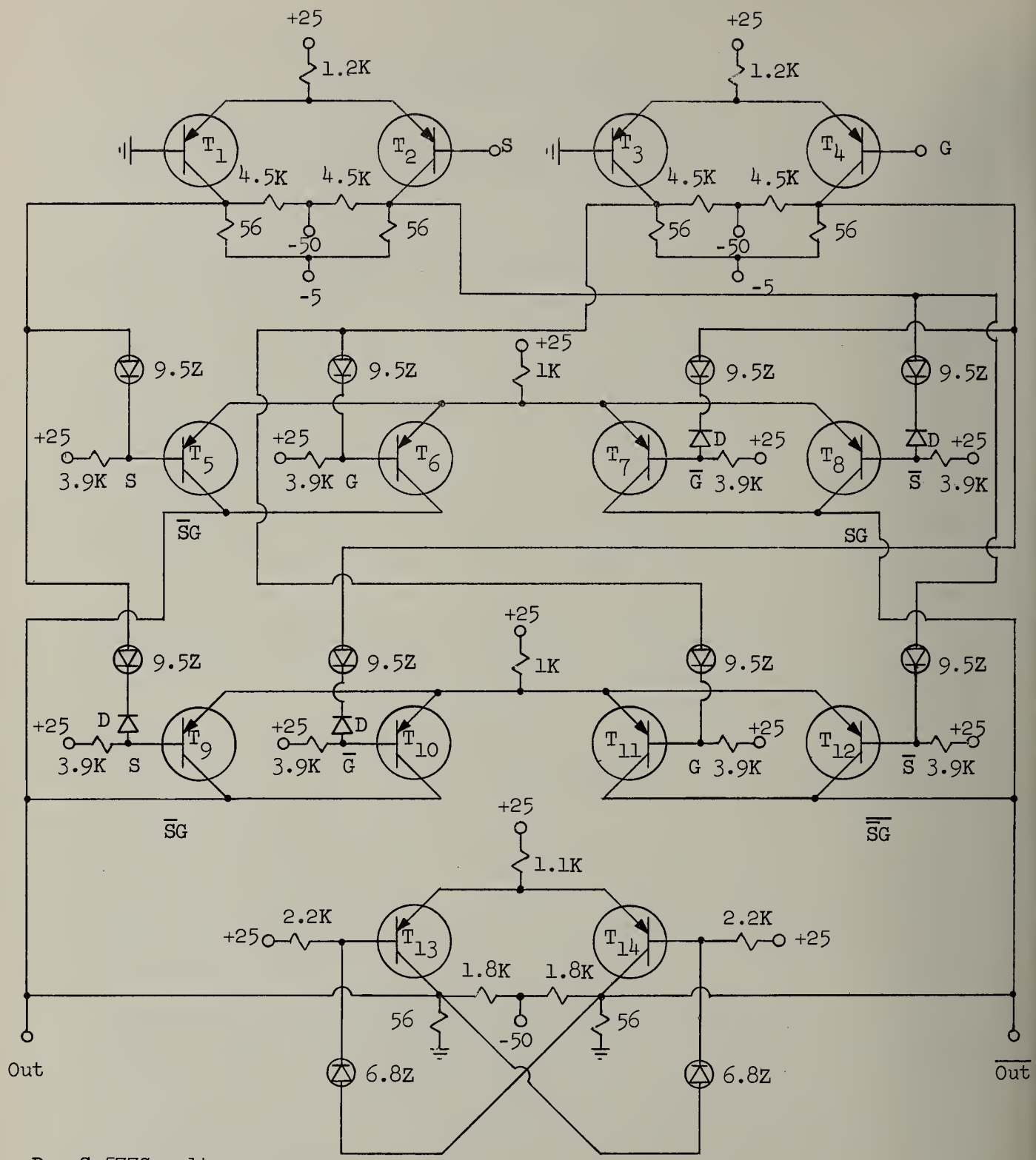

D: S-577G voltage drop across D is about 0.4v

FIGURE 1. Low Swing F-Element.

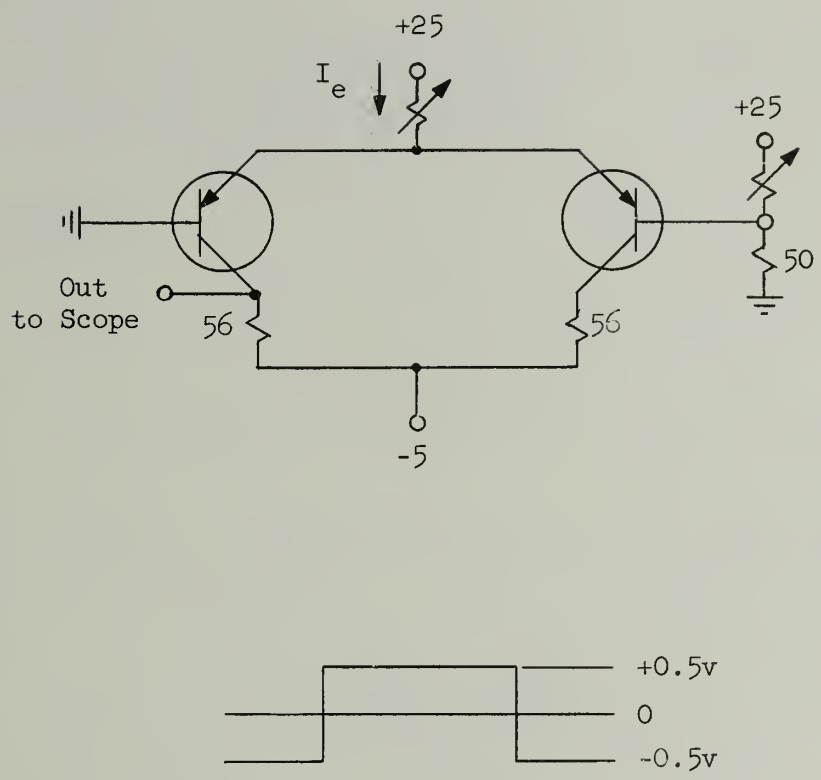

FIGURE 2. Difference Amplifier for Fundamental Measurements.

3. <u>200 mc Clock Using a Distributed Amplifier</u>

The following idea is considered as the basis of the design:

1. It is possible to generate fast risetimes up to .5 msec by using GF45011 transistors in low impedance circuitry.

2. It is not possible to generate repetition rates of more than about 30 mc.

Hence, some sort of distributed circuitry according to Figure 3 must be considered.

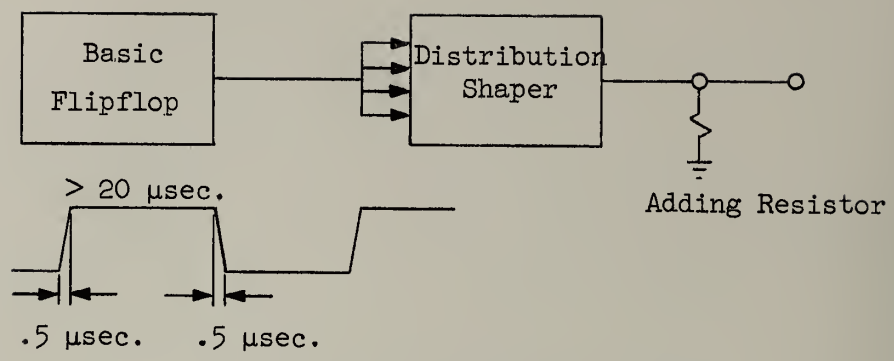

FIGURE 3. Design for a Distributed Amplifier Clock.

The flipflop may be constructed by using low impedance difference amplifiers fed by delay lines. Figure 4 shows one possible layout.

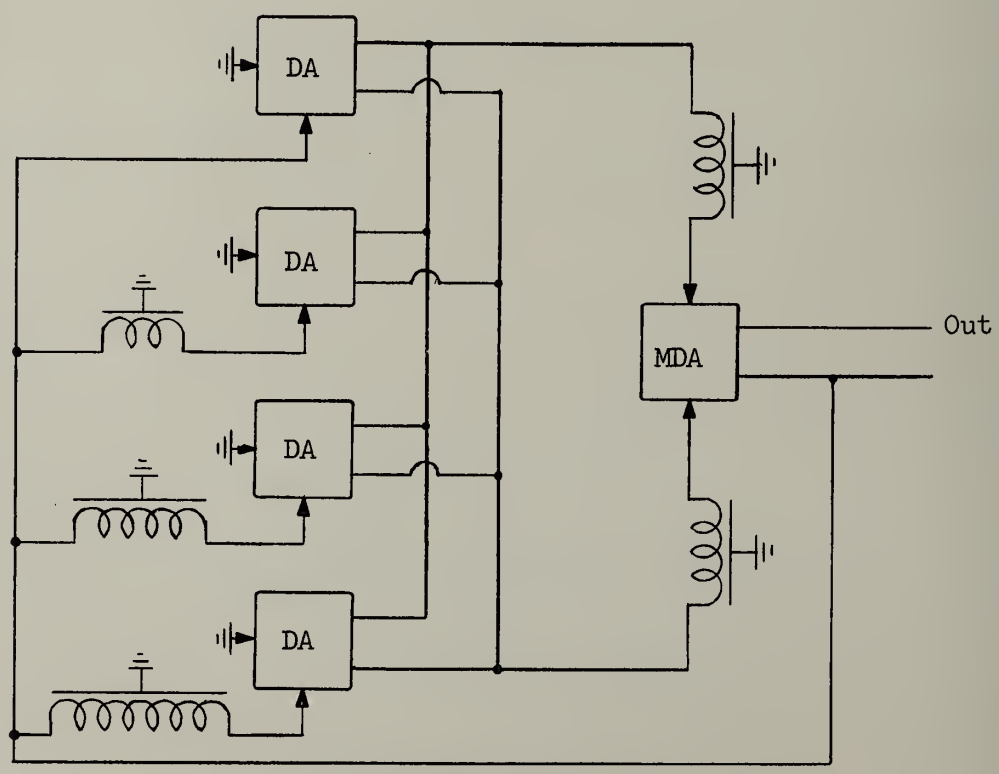

FIGURE 4. Distributed Amplifier Clock.

Visibly, a series of difference amplifiers (with one leg grounded) are fed through delay lines of well chosen delays from the output of a "main difference amplifier" MDA. The latter is fed from the two collector busses coming from the difference amplifier via delay lines. By appropriate physical layout, it should be possible to obtain pulses with rise and fall times of the order of .5 mμs and a width of 2 - 3 mμs.

4. <u>100 mc Oscillator</u>

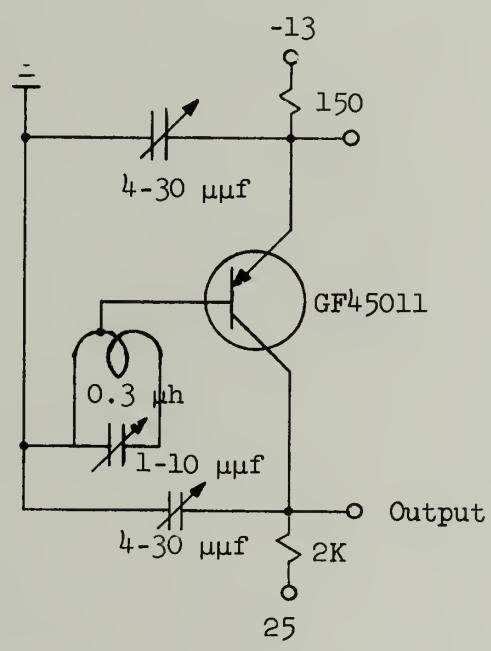

FIGURE 5. 100 mc Oscillator.

The oscillator shown in Figure 5 was built and tested. The frequency was varied from 95 mc to 124 mc by adjusting the emitter capacitor. The other capacitors and the tank top were then adjusted for maximum output. The accompanying curve (see Figure 6) shows a plot of output voltage versus frequency. As the curve shows, the output drops sharply in this range. The voltages of this curve were corrected for an assumed frequency response curve for the 517A oscilloscope (6 db/octave slope from a corner frequency of 50 mc). The actual voltages measured were about one-half those shown on the curve. Because of the sharp drop, it is felt that the frequency of this circuit cannot be extended much past 120 mc. Thus, a frequency doubler is needed in order to obtain 200 mc. Attempts at adding a 200 mc tank to the circuit proved unsuccessful.

5. Fast Pulses on Diodes

A survey of literature on fast diodes showed that just after turn-on, the forward resistance of the diode is known to be much bigger than that predicted by theory. This effect seems to be due to the fact that holes take some time to penetrate the n-region and that quasi-equilibrium calculations cannot be made during transients. Preliminary measurements on S577G diodes from Transitron show that typically for a current pulse of 24 ma and 80 mμs in length the resistance after 10 mμs is more than twice the value after 60 mμs. The conductivity modulation lasted for about 40 mμs. This indicates that the lifetime of holes (or the transit time, if the latter is predominant) must be of the order of 40 mμs. Further investigations are under way.

(W. J. Poppelbaum)

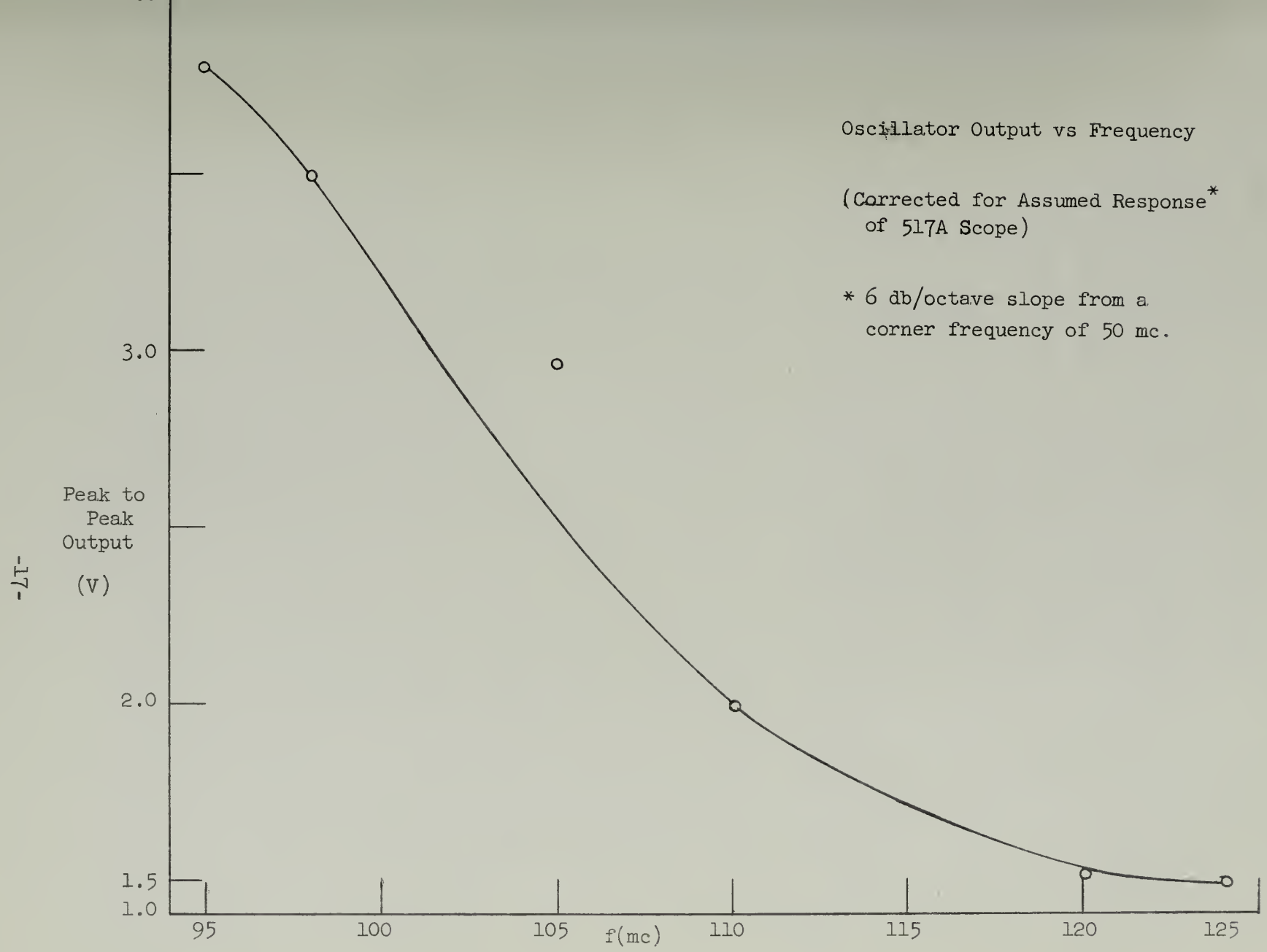

FIGURE 6. Performance of a 100 mc Oscillator.

PART III

SWITCHING CIRCUIT THEORY

A search has been initiated for an efficient error-correcting code to be used with the magnetic tape unit. This code should provide eleven information bits in eighteen channels and have the following properties:

(1) It should yield single-error-correction and double-error-detection.

(2) Neither set of nine channels on left or right sides of the tape shall contain fewer than three ones.

One solution to this problem has been found. Three bits of each set of nine are encoded as check bits in a Hamming type code treating the remaining twelve bits as information bits. A suitable matrix would be the following.

0	0	0	0	1	1	1	0	1	0	0	1	0	0	1	0	0	1
0	0	0	1	1	0	0	1	1	0	1	0	0	1	0	0	1	0
0	0	0	1	0	1	1	1	0	1	0	0	1	0	0	1	0	0
0	0	1	0	0	1	0	0	1	0	1	1	1	0	1	0	0	0
0	1	0	0	1	0	0	1	0	1	1	0	0	1	1	0	0	0
1	0	0	1	0	0	1	0	0	1	0	1	1	1	0	0	0	0

In the interpretation of the code on tape the three left-most and three right-most channels are check bits and are complemented from their usual interpretation. Hence, neither set of nine channels may contain an even number of ones. This may be seen from the fact that the columns representing information bits on the left (right) side have an even (odd) number of ones in the upper three rows and an odd (even) number of ones in the lower three rows.

There remains the problem of encoding the center twelve bits so as to satisfy condition (2). This is done by converting the number represented in binary by the original eleven information bits into the base seven system, yielding four base seven digits. These are encoded in the excess one system. Thus, each base seven digit contains at least one one and since two appear on each side of the tape, we have at least two ones in each set of six. Because

each set of nine channels will have an odd number of ones, this implies at least three ones in the set of nine and condition (2) is satisfied.

Unfortunately, the equipment required for encoding and decoding is rather large for this scheme and a search is being continued for a simpler one. The Illiac is being used for this purpose. If the scheme described here is used, it will require somewhat less than the equipment in two twelve-bit adders for both encoding and decoding plus whatever equipment is used for the Hamming part. A reasonably large saving may be achieved by switching a single unit so it may be used for both encoding and decoding. Furthermore, if time permits, one may use a sequential coding and encoding scheme using a single three bit adder-subtractor unit.

(D. E. Muller and R. L. Cummins)

PART IV

DATA REDUCTION METHODS

Automatic Reduction of Data from Bubble Chamber Photographs (Supported in part by the National Science Foundation under Grant G9503).

Sixteen additional bubble chamber photographs and eight photographs of fingerprints were digitally encoded using the photoelectric input of the TX-2 Computer at Lincoln Laboratory, Lexington, Massachusetts. This digital information was punched out on seven-hole tape, which, in turn, was transcribed to the five-hole tape acceptable by Illiac. The seventeen bubble chamber photographs now in hand represent several hundred tracks of differing quality, gappiness and noise background. These form a sufficiently large sample that when subjected to the procedures described in the October and November reports will enable these procedures to be evaluated.

(K. Hillstrom, M. Kuchnir, B. McCormick, J. Snyder)

PART V

ILLIAC USE AND OPERATION

New Illiac Codes

During the month of December, one new routine was added to the Illiac Auxiliary Library.

V13 - 314 Error Function (DOI or SADOI). This routine computes the function

$$\mathrm{erf}(x) = \frac{2}{\sqrt{\pi}} \int_0^x e^{-t^2}\, dt$$

for $|x| < 1$ by use of a polynomial expansion.

(John Ehrman)

Illiac Usage

During the month of December, specifications were presented for 22 new problems. This list does not indicate how the Illiac was used, because large amounts of machine time may have been consumed by problems with numbers less than 1824T. Numbers followed by T are for theses.

1824T Psychology. Situational Factors in Group Adjustment. The problem is to identify some important variables which lead to group adjustment. By using regression techniques it is hoped to estimate the relative importance of situational and personality variables in adjustment. It is anticipated that only standard Illiac library routines will be used in the solution of this problem.

1825 Institute of Communications Research. Attitudes Toward Science. A correlation matrix is already available. It will be subjected to a centroid factor analysis and then to rotations, both available as library routines.

1826 Psychology. Group Creativity. Pairs of students will be arranged depending on the similarity or dissimilarity of their responses to a number of questionnaires. Each pair will be given several problems to solve; the solution will be a "group problem". The study attempts to find the conditions that maximize group creativity.

This routine will compute 12 Pearson r matrices of 6 x 6 variables based on 15 observations and then compute 1 Pearson r matrix of 50 variables based on 380 observations.

1827 Mechanical Engineering. Diffusion Coefficient Calculation. The diffusion coefficients of oxygen into air have been calculated at different temperatures.

Curves have been obtained by plotting the diffusion coefficient against temperature.

An equation of the form

$$f(T_j) = D_j, \; O_{2 \rightarrow Air} = \sum_{i=1}^{5} a_i \, T_j^{\,i} \;, \quad j = 1, 2 \ldots 5$$

is assumed to fit the curve.

The 5 equations will be solved to find a_i.

1828T Civil Engineering. Elastic Moments and Deflections in Symmetrically Loaded Flat Slabs. This problem is one of determining the moments in symmetrically loaded flat plates. The method to be used is that of approximating the equation:

$$\nabla^2 \cdot \nabla^2 w = p/N$$

where:

$$\nabla^2 = \frac{\partial^2}{\partial x^2} + \frac{\partial^2}{\partial y^2}$$

by the method of finite differences and obtaining a set of simultaneous linear equations. The Illiac will be used to solve the simultaneous equations.

1829T Chemistry and Chemical Engineering. Solution of an Approximated Schroedinger's Equation for the Crystal Field Oribitals of VC_4. The energies and wave functions of a d-electron on a transition metal core in a molecular system may be found, to a good approximation, by solving the simplified Schroedinger's equation

$$\left[\nabla^2 - \left(\frac{6}{r^2} - 2\rho(r) + 2V(r,\theta,\phi) + E\right)\right]\psi = 0$$

where $\rho(r)$ is a self-consistent field potential from the vanadium core and $V(r,\theta,\phi)$ is the potential generated by a set of point charges approximating the remainder of the molecular system.

Karplus, Belford, and Halton under problem numbers 1043 and 1458 have devised means to solve the above equation approximately using variations of library routine F4 and quantum mechanical perturbation theory.

It is desired to apply these routines to the solution of this equation for the specific case of the d-electron on vanadium in vanadium tetrachloride. It is also desired to calculate transition moments, spin-orbit coupling constants, and Jahn-Teller splittings which will require certain cross integrals of solutions of the Schroedinger equation. For this library routine E2 (Simpsons rule integration) will be used.

1830 Economics. Determinants of Expenditure on Public Education. The first part of an analysis of expenditures on public primary and secondary education, described before (Problem Number 1765), has been completed and the results have been written up.

This is a by-product of that same study, an attempt to explore some interesting and unexpected results obtained that pertain to the effect of equalization grants (as opposed to flat grants) on the level of educational expenditure. At the same time, two new variables have been added to the original data. Depending on the results, it is expected that two or three more runs with different combinations of these variables should be sufficient to complete this by-product of the original study.

1831T Contrast of American and Indian Perceptions. The present study is an investigation of the <u>interpersonal perceptions</u> of a sample of Indian and American subjects (100 subjects in each group).

Illiac is required to calculate D scores in order to determine the congruence in perception of ideal self and each person concept (object of judgment) for both groups. Nine person concepts have been used in each group. It will also compute intercorrelations (product-moment method) to determine the relationship between the perceptions of the Indian Subjects of others and period of stay in the United States. Only standard library routines are involved.

1832T Education. Correlated Traits of Ph.D's. The purpose of this study is to study the characteristics of people who obtained doctoral degrees in the Graduate School of the University of Illinois during the academic year 1958-59. Data gathered include subjective statements and objective measures of the subjects and information from the high schools from which the subjects graduated. Other research suggests that a high proportion of people who earn Ph.D's did not appear to be gifted when they were in high school. This study is an attempt to find variables which may help identify potentially gifted people who may not appear as such when evaluated by conventional criteria such as grades and I.Q.

1833T Physical Education. Body Fat Comparisons and Changes and Prediction. Thirty-two measures of body fat, musculature and skeletal measures and body density on 116 young men and 118 adult men have been made. The analysis will attempt to determine the total body fat (predictive) from "in vivo" caliper measurements of subcutaneous fat tissue and to predict body weight from anthropometric observations. Body fat measures on groups of wrestlers, swimmers, basketball players and adult men, <u>in</u> and <u>out</u> of training, have also been made. The analysis is to determine changes in body fat and body density and to compare deposition of body fat at specific sites among groups.

1834 Institute for Research on Exceptional Children. Correlation Between Marital Integration of Parents, Social Status of Family, and 8 Parent-Child Communication Indices. Illiac will be used to obtain sets of zero-order correlation coefficients from an 18 variable measurement matrix consisting of a measure of marital integration of parents in 109 families, social status of each family, and 8 parent-child communication indices; one set of 8 for father-child communication and a similar set for mother-child communication.

Illiac routine KSL 5.90-256 will be used to check the data tapes.

Illiac routine K8-2.01 will be used to obtain 3 triangular r matrices. Matrix A will include 51 families in which a male child is involved, Matrix B will include 58 families in which a female child is involved, and Matrix C will include the entire sample of 109 families (male and female combined).

1835 Digital Computer Laboratory. Relativistic Stars. The determination of the equilibrium mass-radius relation for a relativistic star has been previously treated and is described in Problem Numbers 1501 and 1667. These calculations are to be extended to a wider range of the pertinent parameters.

1836 Industrial Engineering. Linear Programming. This is a class problem assigned in IE 386, Industrial Engineering Analysis, as an exercise in the application of computers to the solution of medium scale linear programming problems. The problem is one on allocation involving 18 variables and 9 equations. Manual solution time is estimated as 4 to 5 hours. Illiac time, using the M15-183 Williams Memory Routine for Linear Programming by the Simplex Method, is estimated as less than 15 minutes.

1837 Theoretical and Applied Mechanics. Numerical Mapping Techniques. A numerical technique has been developed to accomplish the solution of plane elasticity problems based on the conformal mapping technique of Muschelisvili. It involves the solution of a set of linear algebraic equations. Routine L7 will be used to obtain numerical results for several cases in order to check the accuracy of the method.

1838 Psychiatry. Effective Methods of Psychotherapy. Tape recorded interviews were obtained from interviews between four patients and three therapists at the Chicago College of Medicine. These interviews were broken down into statements made by therapists and patients. The statements were then subdivided into bits of information as to reactions of patients to therapists and therapists to patients. Each of the three therapists utilized a different technique in their interview session. By obtaining frequency distributions and chi square results, it is hoped to determine answers to the following questions: to what extent and in what manner do the three interviewers constitute separate ways of "treatment", to what extent and in what manner do the patients' responses differ from "treatment" to "treatment", and does the subjectivity of the patients' responses tend to vary with the subjectivity of the interviewer's comments.

1839 Animal Science. Zinc in Rat Nutrition. The problem involves a study of factors affecting utilization of dietary zinc by the rat. Thirteen independent and twelve dependent variables on 32 animals will be analyzed by analysis of variance and co-variance.

1840T Electrical Engineering. Electromagnetic Wave Propagating Along Curved Wire. By using a toroidal coordinate system, an approximate differential equation is obtained for waves propagating along a thin circular ring. The boundary condition, the tangential component of electric field vanishes, gives a transcendental equation for the propagation constant of the waves.

$$u(p) \operatorname{Sin} p\psi + v(p) \cos p\psi = 0$$

where

$$u(p) = \int_0^\infty \frac{\cos p\upsilon}{(e^{\upsilon} - 1)^{1/2}} d\upsilon$$

$$v(p) = \int_0^\infty \frac{\operatorname{Sin} p\upsilon}{(e^{\upsilon} - 1)^{1/2}} d\upsilon$$

and ψ is a given parameter which is related to the size of the wire.

Illiac will be employed to determine p from the above equation. The functions u(p) and v(p) will be integrated by using floating point routines A-6 and EA-1.

1841T Mechanical Engineering. Turbulent Boundary Layer. This is an attempt to solve the problem of turbulent boundary layer growth on a flat plate with arbitrary initial mean velocity distribution. The flat plate boundary layer equations are to be solved using the method of finite differences.

1842T Sociology. Factor Analysis of Parents' Rankings of Ten Life Goals for Children. Fathers and mothers in 365 families ranked a list of ten life goals in order of importance as they perceived it and as they hoped their children would rank them. Each parent ranked the same list of ten life goals twice: once for boys and once for girls.

It is proposed that four factor analyses be performed: (1) Fathers' rankings for boys, (2) Fathers' rankings for girls, (3) Mothers' rankings for boys, and (4) Mothers' rankings for girls.

KSL 5.90 will be used to check the data tape for consistency. Correlation matrices will be obtained through use of K8-2.01. Then KSL 1.20 will be used in the initial factorization of the r matrices in order to estimate k, the number of common factors. KSL 1.52 will then be used to estimate communalities followed by final factorization with KSL 1.20 using the estimated communalities. Finally, KSL 1.80 will be used to rotate the factor matrix to orthogonal simple structure.

1843 Institute for Research on Exceptional Children. D^2 Analysis of Father's, Mother's, and Child's Rankings of Ten Life Goals for Children. Both parents and one child between the ages of 11 to 16 years in 109 families ranked a list of ten life goals for children. The parents ranked the goals in their order of preference as they hoped their children (or any child) would rank them. The child ranked the goals in order of importance from his own standpoint.

For each family there are five sets of rankings of the same ten life goals: Father's rankings for a boy and a girl separately, mother's rankings for a boy and a girl, and the child's ranking.

Part I of the analysis will be to obtain D^2 matrices from among the five sets of ranks for each of the 109 families.

Part II of the analysis will be identical to Part I except that "synthetic" families will be formed by random selection of fathers, mothers and children from the pool of 109 families.

Comparison of results of Parts I and II should make possible some estimation of the relative influence of (1) the unique family situation versus (2) general cultural prescriptions and values in determining the degree of agreement among parents and between parents and children in ranking the ten life goals for children.

It is proposed that KSL 5.90 be used to check the data tapes for consistency. Then KSL 2.70 will be used to obtain the D^2 matrices.

1844 Bureau of Community Planning. Traffic Linkage Patterns. The objective is to develop statistical models for estimating inter-community traffic between Champaign-Urbana and the surrounding communities in East Central Illinois.

Two types of models will be developed: aggregate models, the purpose of which is to explain the total amount of traffic; and component models, in which the total traffic is classified according to the purposes of trips. These purposes are work, business, medical and dental, school, shopping and pleasure.

Accordingly, seven sets of models would be developed. With respect to any given set, two stages of correlation would be involved: the first stage would involve only simple correlation analysis, i. e., correlating only the dependent variables with only one specified independent variable exhausting some specified transformations; the second stage would involve multiple correlation analysis, using the information provided by the first stage.

Only the standard library routines would be involved.

1845T Agricultural Economics. Cost Function Analysis. It is the objective of this problem to estimate functional relationships between operating costs of agricultural firms and changes in land size and other inputs.

Linear regression analysis will be used in the solution of this problem, within the framework of the K-16 library routine.

Table I shows the distribution of Illiac machine time for the month of December.

TABLE I

	Hrs:Min	
Scheduled Maintenance	57:40	
Unscheduled Maintenance	5:39	
Drum Engineering	5:05	
R.A.R.	:10	
Leapfrog	8:18	
Library Development	2:06	
Demonstrations	1:10	
Classes	:46	
Wasted	:25	
Instruction	:01	
		81:20

Use by Departments

Agricultural Economics	4:29
Agronomy (0015-15-306)	:32
Agronomy (ARS 46-15-15-317)	:03
Agronomy	3:25
Animal Science (HATCH 21-15-20-352)	:04
Animal Science	2:33
Bureau of Community Planning	:06
Bureau of Economic and Business Research	:02
Bureau of Educational Research	4:40
Chemistry (NSFG 7336)	8:24
Chemistry	35:12
Civil Engineering (NSF-G6572)	8:40
Civil Engineering (AASHO ROAD TEST)	7:56
Civil Engineering (CAT. TR. CO. 442-220-310)	:09
Civil Engineering	31:51
Coordinated Science Lab. (DA-36-039-SC56695)	54:46
Dairy Science	:10
Digital Computer Lab. (AEC AT(11-1)-415)	11:42
Digital Computer Lab. (NSF GRANT 9503)	17:06
Digital Computer Lab. (NONR 1834(27))	:06
Digital Computer Laboratory	11:53
Economics (NSFG 7056)	:57
Economics	:23
Education	:16
Electrical Engineering (NASA-NSG 24-29)	4:36
Electrical Engineering (NSFG 7421)	:13
Electrical Engineering (IOWA GRANT 1955)	:39
Electrical Engineering (AF 19(604)-5565)	:34
Electrical Engineering (NONR 1834(02))	6:22
Electrical Engineering	6:17

	Hrs:Min		
Health Service	:22		
Institute of Communications Res. (44-28-20-378)	4:10		
Institute of Communications Res. (46-28-20-364)	4:35		
Institute of Labor and Industrial Relations	3:43		
Industrial Engineering	:24		
Inst. for Res. on Excep. Chil. (HE and WSAE 8204)	2:55		
Inst. for Res. on Excep. Chil. (USPH NIH M-3207)	:11		
Mathematics	11:37		
Mechanical Engineering (DA-11-022-ORD1980)	:04		
Mechanical Engineering (NSG-13-59)	:12		
Mechanical Engineering	:22		
Mining and Metallurgical Eng. (TRUS AF6770)	:32		
Mining and Metallurgical Eng. (CML 51F)	:45		
Music	:31		
Physical Education	3:01		
Physics (NONR 1834(05)A)	6:12		
Physics	2:44		
Psychology (MD 2060)	1:04		
Psychology (AF 49(638)371)	19:27		
Psychology (SAE 8383)	1:24		
Psychology	68:00		
Sociology	3:37		
State Water Survey (DA-36-039-SC75055)	2:28		
State Water Survey	8:22		
Theo. and Appl. Mechanics (DA-11-070-508 ORD)	:23		
Theo. and Appl. Mechanics (AF(616)6643)	:48		
Theoretical and Applied Mechanics	2:39		
		402:49	
			484:09

Error Frequency and Analysis

The machine is normally used for "engineering" and maintenance between 7:00 a.m. and 10:30 a.m. Since the periods between 7:00 a.m. and 10:30 a.m., together with certain irregular periods, such as Saturdays and Sundays, are devoted to a heterogeneous group of engineering, maintenance and laboratory functions, it is more instructive, from an error standpoint, to look at the periods between 10:30 a.m. and 7:00 a.m. of the next day in order to make an observation of the error frequency in the machine. This is the actual period when the machine is designated for use, although certain engineering procedures frequently require the scheduling of extra maintenance time. With this in mind, a summary table has been prepared

using the period between 10:30 a.m. and 7:00 a.m. of the next day. This table lists the running time when the machine was operating, the amount of time devoted to routine engineering, the amount of time devoted to repairs because of breakdowns, and a number of failures while the machine was listed as running. Each failure was considered to have terminated a running period and was followed by a repair period in preparing this table. Since the leapfrog code is our most significant machine test, the length of time which it has been used on the machine is listed separately, together with the number of errors associated with that particular code. This information for the month is presented in Table II.

It is important to notice that, except during scheduled engineering periods, any interruption of machine time that was not planned is considered a failure in this table. In rare cases, where the failure is not known until a later time, it is possible that no repair period is associated with the failure. This over-all system has been adopted because it makes it possible for a machine user to estimate directly the probability that the machine will be "running" any instant of time and the probability of a failure during any given interval of running time.

TABLE III

Arithmetic	2
Memory	4
Reader	2
Punch	2
Drum	2
Power Supplies	2
Unknown	2
Total	16

TABLE II

DATE	RUNNING OK TIME	REPAIR TIME	SCHEDULED ENGINEERING	INTERRUPTIONS OR FAILURES STOPPING OK TIME	TYPES OF INTERRUPTIONS OR FAILURES CAUSING REPAIR TIME	WASTED	LEAPFROG	FAILURES STOPPING LEAPFROG
12/1/60	20:02	:32	3:26	1	(1) Tubes in adder causing failures.	:00	:20	0
12/2/60	21:55	:00	2:05	0		:00	1:03	0
12/5/60	20:50	:04	3:06	2	(1) Memory 2^{-19}. (2) Punch "4" adjusted.	:00	:08	1
12/6/60	21:13	:00	2:47	0		:00	:08	0
12/7/60	20:58	:00	3:02	0		:00	:05	0
12/8/60	19:49	:52	3:19	1	(1) Drum failure.	:00	:20	0
12/9/60	21:28	:05	2:25	1	(1) Punch 4 failed.	:02	:14	0
12/12/60	20:49	:21	2:50	1	(1) Drum failure.	:00	:02	0
12/13/60	20:24	:00	3:36	0		:00	:02	0
12/14/60	21:26	:34	2:00	1	(1) -300 v. power supply went off.	:00	1:16	0
12/15/60	21:28	:00	2:32	0		:00	:04	0
12/16/60	20:59	:21	2:30	2	(1) Memory 2^{-16}. (2) Memory 2^{-3}.	:10	:19	1
12/19/60	20:03	1:00	2:57	2	(1) Unknown. (2) Unknown.	:00	:20	0
12/20/60	19:34	1:56	2:30	1	(1) Trouble in adder.	:00	:07	0
12/21/60	20:54	:10	2:56	1	(1) Memory failure 2^{-13}.	:00	:22	1
12/22/60	21:10	:00	2:50	0		:00	1:32	0
12/23/60	4:00	:00	:00	0		:00	:08	0

DATE	RUNNING OK TIME	REPAIR TIME	SCHEDULED ENGINEERING	INTERRUPTIONS OR FAILURES STOPPING OK TIME	TYPES OF INTERRUPTIONS OR FAILURES CAUSING REPAIR TIME	WASTED	LEAPFROG	FAILURES STOPPING LEAPFROG
12/27/60	20:30	:00	3:30	0		:00	:36	0
12/28/60	20:28	:00	3:32	0		:00	:06	0
12/29/60	20:38	:00	3:22	0		:00	:44	0
12/30/60	20:26	1:05	2:16	1	(1) DC dropped out, cause undetermined.	:13	:13	0
TOTALS	419:04	7:00	57:31	14		:25	7:56	0

PART VI

INTERNATIONAL BUSINESS MACHINES 650 USE AND OPERATION

New International Business Machines 650 Codes

During the month of December, one new 650 routine was added to the International Business Machines 650 Library.

K7' - 68' General Least-Squares Program. This program makes a least-square fit to any number of data points, (x, y), exact in x and uncertain in y, to a function of the form

$$y(x) = \sum_{k=0}^{n} a_k \phi_k (x),$$

where $\phi_k(x)$ is an arbitrary function of x only, and n is the order of the fit. $0 \leq n \leq 10$.

The program computes and punches out the fitted parameter a_k and makes tables of y(x) for a range of values of x. It punches out the error matrix of the fit, which propagates errors in a_k and y(x). It also punches out information necessary to make a chi-square (χ^2) test of the fit.

This program originated at the Lawrence Radiation Laboratory, University of California, Berkeley, California, where it was programmed by L. K. Goodwin.

(Writeup by F. Shimamoto)

International Business Machines 650 Usage

During the month of December, specifications were presented for 10 new problems. This list does not indicate how the International Business Machines 650 was used, because large amounts of machine time may have been consumed by problems with numbers less than 192'T. Numbers followed by T are for theses.

192'T Animal Science. Luteotrophic Hormone Release Mechanisms. Luteotrophic hormone (LTH), an anterior pituitary hormone, is responsible for the formation and maintenance of the corpora lutea of the ovary. The corpora lutea, under the influence of LTH, secrete progesterone which is responsible for implantation of the zygote and the maintenance of pregnancy. If, however, the animal is not mated or does not become pregnant when mated, the progesterone is not needed and the corpora lutea regress allowing a new ovarian cycle to begin. Therefore, it seems that two LTH releasing mechanisms exist, the first being used only to prepare the uterus of the animal to implant the fertilized egg, and the second being used to maintain the pregnancy.

This experiment was designed to study the mechanism of the first LTH release in the non-pregnant animal, and specifically to determine the exact time (in relation to the sequence of events in the ovarian cycle) at which the LTH release begins and ends.

Since the weights of corpora lutea are dependent upon the LTH being released, these weights are the best measure of the amount of LTH being released at any particular time. Therefore, the interruption of LTH release in the normal animal at various times by artificial means would allow a quantitative measurement of the LTH released at a specific time.

LTH release was interrupted on each of the 3 days following ovulation. The ovaries were removed at 6, 10, 14 days following the interruption of LTH release and the corpora lutea weights were recorded.

The statistical analysis will be used to compare corpora lutea weights of the animals on the three treatments with the controls, and also to determine if the response to the treatments varies with the day on which the ovaries are removed and the corpora lutea weighed. Other comparisons will be made which are similar to those just explained.

The mathematical method to be used will be that of the method of least squares.

193' Horticulture. Strawberry Quality Evaluation. Forty-two strawberry varieties were evaluated for eight quality characteristics by a taste panel. The samples were presented to the panel in blocks of six, using a 6 x 7 rectangular lattice design consisting of two replications. All eight quality characteristics will be analyzed using an Analysis of Variance Rectangular Lattice Program.

194' Agronomy. Forage Crop Variety Testing. This is a 650 application of the work presently being done under Illiac Problem Number 1365.

The problem is to evaluate the performance of crop varieties by conducting tests at several locations in the state over several years. Each year, the data will be summarized with data from preceding years. This old data will be held on tape and a new tape made incorporating the new data.

Output will be on-line to the 407 in tabular form ready for publication.

This is a data processing application involving analysis of variance as the major statistical tool.

195'T Civil Engineering. A Non-Linear Approach to Instantaneous Unit Hydrograph Theory. For the purposes of the IBM 650, the problem can be divided into two parts. First, given a direct runoff hydrograph and an effective hydrograph, it is desired to find the instantaneous unit hydrograph on the basis of linearity.

Two theories, one due to Nash and the other due to Dooge, are available. Both these theories require evaluation of certain parameters defining the instantaneous unit hydrograph. Nash gives

$$u(t) = \frac{1}{k\Gamma n} e^{-\left(\frac{t}{k}\right)} \left(\frac{t}{k}\right)^{n-1}$$

where u(t) is the instantaneous unit hydrograph ordinate at time t. Then

$$Q_{t_1} = \int_0^{t_1} u(t-\tau)\, I(\tau)\, d\tau \quad (a)$$

Knowing Q and $I(\tau)$, the curve of u is to be determined.

The parameters n and k will be evaluated by the method of moments.

$$nk = \left[\frac{\sum_{i=1}^{\sim 150} Q_i i}{\sum_{i=1}^{\sim 150} Q_i} - \frac{\sum_{i=1}^{\sim 25} I_i i}{\sum_{i=1}^{\sim 25} I_i} \right] \Delta t$$

$$n(n+1)k^2 = \left[\frac{\sum_{i=1}^{\sim 150} Q_i \, i^2}{\sum_{i=1}^{\sim 150} Q_i} - \frac{\sum_{i=1}^{\sim 250} I_i \, i^2}{\sum_{i=1}^{\sim 250} I_i} \right] (\Delta t)^2 - 2nk \frac{\sum_{i=1}^{\sim 25} I_i \, i}{\sum_{i=1}^{\sim 25} I_i} \Delta t$$

From these n and k values, hydrograph of surface runoff will be computed by using equation (a). The original hydrograph and the one derived as above when plotted by the machine shall indicate the suitability of the method used. If the curves do not fit well, some other procedure may have to be used. About four hydrographs will be analyzed for one watershed and five watersheds may be selected ranging from 1/2 to 1,000 square miles.

The second problem arises by noting that any variation in values of n and k for the same catchment (watershed) and the trend of variation with different size catchments will indicate the existence of non-linear effects. A proper function (which may have to be found by trial and error) will be incorporated in equation (a) so that n and k values for a particular catchment do not change with intensity and duration of precipitation. The procedure (after proper modification) as detailed above will be used for verification.

196'T Electrical Engineering. Backward Wave Antennas. The problem is a study of the characteristics of periodic antenna structures in the backward wave mode. The International Business Machines 650 will be used to calculate element patterns and array patterns for a large range of the parameters of these structures and to compare results with measurements.

The first of these calculations has the form

$$P_{(A+JX)} = \frac{1}{A+JX} \left(2 \operatorname{Sinh} \frac{A+JX}{2} - \operatorname{Sinh} \frac{A+JX}{4}\right)$$

The results are to be printed out for 20 values of A and 360 values of X.

197' State Water Survey. Radar Echo Height-Frequency Determination. Radar information in polar coordinates is entered into cards. The International Business Machines 650 will convert to rectangular coordinates, and determine maximum echo heights in each of 408 squares for each azimuthal scan of the radar. A total echo height frequency table will be totaled

for each day of radar data. The results will be used in evaluating results of the energized wire operated in the vicinity of Weldon during the summer of 1960.

198' Bursar's Office. Payroll: Complete System-Primary. All master files are to be maintained on tape. This will include annual pay as stated on appointments as well as monthly pay and deductions as computed by the 650. Where multiple sources of funds are involved, as many as 3 tape records will be required for the employees.

Each month the tape will be used to generate cards which will be returned to the Statistical Service Unit for writing payroll vouchers, check registers, checks, bank lists and State Auditor cards. When possible, sources of funds will be summarized so that one card will be produced instead of 2 or 3. During processing, a Monthly Earnings Report will be printed on line showing year to date totals and current earnings details. A new master tape will be written containing the updated year to date totals and any changes to the master record which were entered for the month from cards.

In addition, a third tape will be created carrying current detail pay by source of funds for each employee.

All master tapes for which changes are entered will be flagged on the new master written. After the payroll is completed, the tapes will be rewound; then output (new masters) will be used and each flagged record printed on a Master Authorization card which will be returned immediately to the Bursar's Office for verification of processing and placement in their permanent files. This operation will normally require not more than an hour.

Twice a year--once for academic and once for non-academic, when the file is completely remade, a special run will be made. However, these will be done at times other than normal payroll processing time.

The total time for this operation is expected to be 12-14 hours per month.

199' Civil Engineering. Multi-story Earthquake Analysis. An analysis will be made of the behavior of multi-story structures subjected to earthquake forces--assuming elasto-plastic behavior of the restraining material. The earthquake input will consist of an accelerogram similar to that of the El-Centro earthquake. The method to be employed will be that of numerical integration known as the Beta method. Comparisons will be made in the results obtained for various mass-stiffness ratios.

200' Agronomy. One-Dimensional Flow Equation. The determination of the moisture content of a soil which has an <u>initial</u> moisture content, and subsequently ($t > 0$) has moisture applied to one boundary of a semi-infinite region is given by the non-linear differential equation

$$\text{(I)} \quad \begin{cases} \partial\theta/\partial t = \partial\left[D(\theta)\,\partial\,\theta(x,t)/\partial x\right]/\partial x, \\ \theta(0,t) = \theta_b,\ \theta(x,0) = \theta_i, \end{cases}$$

where $D(\theta) = \alpha\, e^{\beta\theta}$ and θ_b, θ_i, α and β are constants.

By seeking solutions of the form $\theta(x/\sqrt{2t})$, problem (I) is reduced to the solution of the non-linear equation

$$\text{(II)} \quad \begin{cases} f(\eta)\, f''(\eta) = -\ f'(\eta) \\ f(0) = e^{\beta\theta_b},\ f(\infty) = e^{\beta\theta_i},\ \text{where } \eta = \xi/\sqrt{2t}. \end{cases}$$

A Taylor series solution of (II) is sought. The determination of the coefficients $f^{(n)}(0)$ of the series necessitates the solution of a large system of algebraic equations. At present, it appears as if 25 equations will be involved.

201' Bursar's Office. Payroll-Complete System-Secondary. Using the current detail tape produced in the primary operation and the previous year-to-date detail tape, an updated detail tape would be written. During this operation, date for transfer of sources of funds for salaries would be punched out to be incorporated with monthly payroll report by account number. At the same time, cards would be punched by specific account number for which summary cards were produced in the primary run. These cards, too, must be created for the payroll report by account number.

The total time for this operation is 4-6 hours per month.

Table I' shows the distribution of the International Business Machines 650 machine time for the month of December.

TABLE 1'

		Hrs:Min	
Scheduled Engineering		15:37	
Unscheduled Engineering		17:44	
Agronomy Library		3:45	
Digital Computer Laboratory Library		:18	
Classes		23:10	
CE 391	9:25		
Math 295	13:45		
Wasted		4:32	
			65:06

Use by Departments

Agricultural Economics		2:09	
Agronomy		8:46	
Animal Science		:23	
Chemistry		2:23	
Civil Engineering		40:56	
Digital Computer Laboratory		1:14	
Electrical Engineering		:39	
Graduate College		9:28	
Mechanical Engineering		:16	
Mining and Metallurgical Engineering		:24	
Physics		3:32	
State Water Survey		9:47	
Statistical Service Unit		107:10	
Admissions and Records	9:21		
Agricultural Extension	5:25		
Bureau of Educational Research	4:47		
Bureau of Institutional Research	:10		
Bursar's Office	12:42		
Business Office	8:56		
DHIA	39:43		
Education	5:53		
Home Economics	2:29		
Horticulture	6:17		
Music	:08		
Political Science	1:29		
Psychology	8:37		
Statistical Service Unit	:12		
Student Counseling Service	1:01		
			187:07
			252:13

Error Frequency and Analysis

The International Business Machines 650 is normally on from 8:00 a.m. to 5:00 p.m. The machine is used for preventive maintenance from 8:00 a.m. to 12:00 noon on Mondays.

Table II' gives the daily breakdown of machine time with respect to wastage and unscheduled maintenance.

Table III' presents a summary of errors for August.

TABLE III'

407		6
Does not cycle properly	2	
Card jam	1	
Printing incorrectly	2	
Mechanical adjustments necessary	1	
533		1
Bent connectors	1	
653 (IAS, floating point, index registers)		7
False storage selection lights	3	
Storage unit hang-ups	1	
Floating point	2	
Index registers	1	
Tapes, 727 (tape units) or 652 (tape control)		10
When writing, reflective spots read when none present	3	
Error in reading tape	3	
Tape indicates light on when it should not have been	1	
Pin fell out of tape unit	1	
Rewinds incorrectly	1	
Would not load-rewind correctly	1	
Blank or multiple bits		7
Accumulator	1	
Distributor	3	
Program register	3	
TOTAL		31

DATE	RUNNING OK TIME	SCHEDULED ENGINEERING	REPAIR TIME	WASTED	FAILURES STOPPING OK TIME	TYPES OF FAILURES CAUSING REPAIR TIME
12/1/60	11:34		:35	:11	3	(1) 407 does not cycle when on line. (2) Three storage selection lights but no error. (3) Tape was read as if a reflective mark present, but none on tape.
12/2/60	12:28		:06	:05	2	(1) Bent connectors in 533. (2) Had four blank and multiple bits in accumulator.
12/5/60	5:34	4:00	2:20	:06	0	
12/6/60	11:45			:19	2	(1) Error in reading SOAP tape. (2) Card jam in 407.
12/7/60	11:50		:12	:10	2	(1) Storage unit hang ups in 9006. (2) Floating point multiply hang ups.
12/8/60	11:52			:22	3	(1) Tape unit 2 recognized a reflective spot when there was none. (2) False storage unit lights 13 times. (3) Tape unit 3 had tape indicate light when it should not.
12/9/60	11:51			:11	2	(1) Tape unit 3 recognized a reflective spot when there was none, twice. (2) False storage unit light many times.
12/12/60	5:19	4:00	2:53		2	(1) SOAP would not read correctly from unit 2. (2) Blank accumulator 5 times due to floating point trouble.
12/13/60	12:06			:10	2	(1) Lost quinary bit in pos. 1 of the distributor. (2) Lost quinary bit in pos. 7 of the distributor.
12/14/60	5:16		6:18	:30	0	

DATE	RUNNING OK TIME	SCHEDULED ENGINEERING	REPAIR TIME	WASTED	FAILURES STOPPING OK TIME	TYPES OF FAILURES CAUSING REPAIR TIME
12/15/60	9:59		1:25	:36	1	(1) 407 printing alpha at random from word four instead of numbers.
12/16/60	9:54		1:56	:18	1	(1) 407 keys cycling when off line.
12/19/60	8:17	3:45		:15	0	
12/20/60	11:52		:10	:10	2	(1) Pin fell out of tape unit 1. (2) Program register lost a binary bit in pos. 1.
12/21/60	10:44		1:10	:17	1	(1) 407 printing incorrectly due to a broken selector clutch dog.
12/22/60	11:59			:10	4	(1) Program register lost a 4 bit in pos. 4. (2) Tape unit 2 did not rewind correctly. (3) Tape error of some kind on SOAPing. (4) Tape unit 2 would not load rewind.
12/23/60	3:53			:07	0	
12/27/60	8:03	3:52		:05	0	
12/28/60	13:48		(1:20)*	:09	1	(1) 407 had some bad mechanical adjustments. Engineering done while off line production done.
12/29/60	11:16		:37	:09	1	(1) Index register c picking up the 5 binary bit in pos. 3. Bad tube.
12/30/60	15:00		:02	:12	2	(1) Multiple bits in pos. 1 of program register. (2) Double sign in distributor.
TOTALS	214:20	15:37	17:44	4:32	31	

*Unscheduled engineering done on any machine which does not result in a stoppage of production is noted in ( ) and the time is not included in the total repair time.

PART VII

GENERAL LABORATORY INFORMATION

Seminars

"Preliminary Report on Automatic Scanning of Bubble Chamber Photographs", by Professor James N. Snyder, Digital Computer Laboratory, University of Illinois, December 2, 1960.

"High-Speed Logic in Memories", by Dr. J. A. Rajchman, System Research Laboratory, RCA, Princeton, New Jersey, December 5, 1960.

"State Reduction and Assignment for Sequential Machines", by Dr. Raymond E. Miller, IBM, Yorktown Heights, New York, December 12, 1960.

Reports

Report No. 105, "A Critical Study of ALGOL", by Herman Bottenbruch, Oak Ridge National Laboratory, Oak Ridge, Tennessee (written during a six-weeks visit to the Digital Computer Laboratory).

Personnel

The number of people associated with the Laboratory in various capacities is given in the following table:

	Full-time	Part-time	Full-time Equivalent
Faculty	10	1	10.75
Visiting Faculty	2	0	2.00
Research Associates	2	0	2.00
Graduate Research Assistants	8	28	23.25
Graduate Teaching Assistants	0	5	2.50
Administrative and Clerical	6	0	6.00
Other Nonacademic Employees	39	13	44.07
Totals	67	47	91.57

The Laboratory Advisory Committee consists of Professors H. C. Brearley, K. W. Dickman, L. D. Fosdick, D. B. Gillies, B. H. McCormick, G. A. Metze, D. E. Muller, T. A. Murrell, W. J. Poppelbaum, J. E. Robertson and J. N. Snyder.